WMAU + UPAU
TMB + UPAU

ELENCO SCHEMI ELETTRICI

LISTA ÖVER ELKRETSSCHEMAN

LISTE DE SCHÉMAS ÉLECTRIQUES

LISTE DER ELEKTROPLÄNE

LISTADO ESQUEMAS ELÉCTRICOS

ПЕРЕЧЕНЬ ЭЛЕКТРОСХЕМ

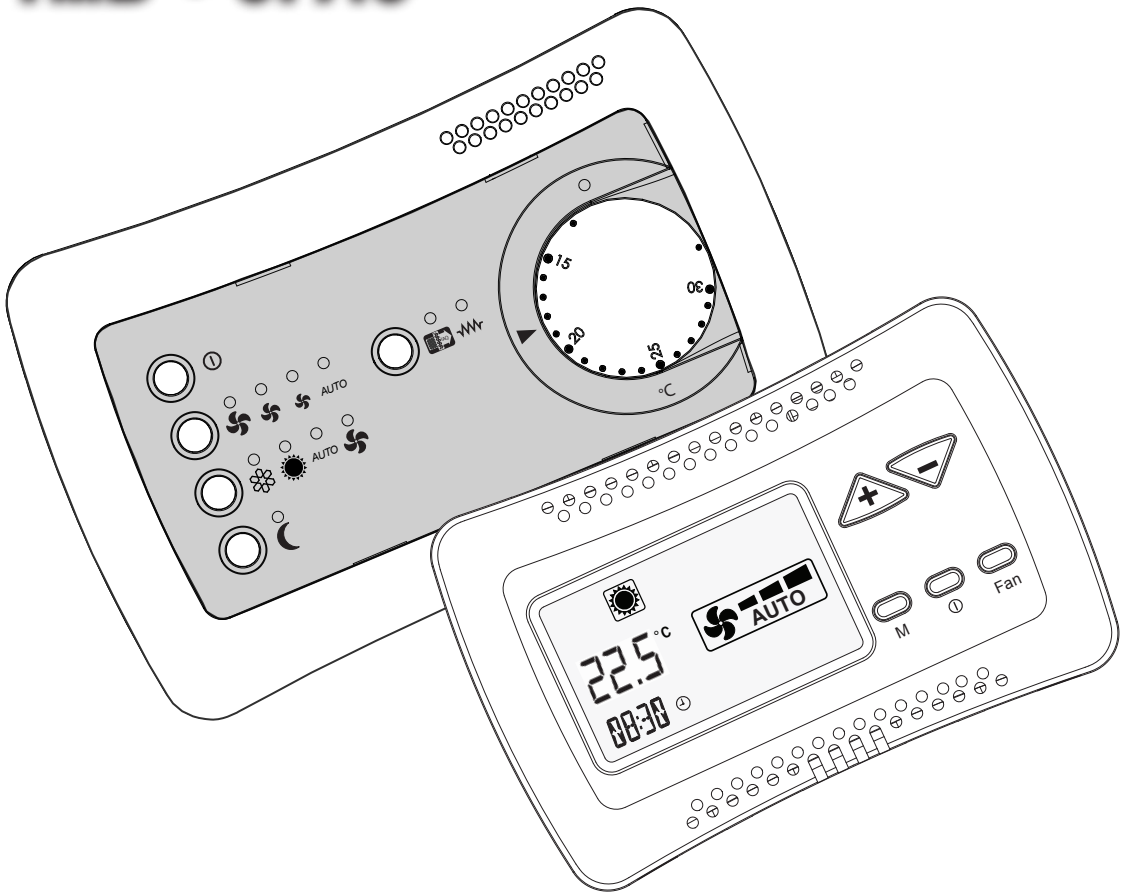

(Questo documento integra il manuale di uso, installazione e manutenzione cod. 4050963A)

(Detta dokument kompletterar bruksanvisningen, installations- och underhållskod 4050963A)

E 02/15
A 02/15
Cod. 4050963B

LEGENDA

SEC 1 = Scheda Cassette
SEP = Scheda gestione pompa
BLAC = Scheda elettronica Inverter
M = Motoventilatore
E = Valvola acqua (IMPIANTO A 2 TUBI)
E1 = Valvola acqua CALDA o resistenza elettrica
E2 = Valvola acqua FREDDA
= Estate - aria fredda
= Inverno - aria calda
T1 = Sonda aria
T2 = Sonda temperatura acqua/ CHANGE-OVER
T3 = Sonda di minima T3
Q1 = Sezionatore con un polo protetto da fusibile (raccomandato)
EH = Resistenza elettrica
IAQ = Filtro elettronico
MP = Pompa di evacuazione condensa
B2 = Termostato di sicurezza a riarmo automatico
B3 = Termostato di sicurezza a riarmo manuale

GNYE = Giallo/Verde
RD = Rosso = Minima
OG = Arancio = Media
BK = Nero = Massima
BN = Marrone
BU = Blu

FÖRKLARING

SEC 1 = Kretskort kassettaggregat
SEP = styrkort för pump
BLAC=kretskort för inverter
M = Fläkt
E = Vattenventil (aggregat med 2 rör)
E1 = Varmvattenventil eller elvärmare
E2 = Kallvattenventil
= Sommar – kall luft
= Vinter – varm luft
T1 = luftgivare
T2 = vattentemperaturgivare/ VÄXLING
T3 = T3 låg temperatur (frånslagstermostat)
Q1 = Brytare med en pol skyddad av säkring (rekommenderas)
EH = Elvärmare
IAQ = Elektroniskt filter
MP = Kondensatpump
B2 = Säkerhetstermostat med automatisk återställning
B3 = Säkerhetstermostat med manuell återställning

GNYE = Gul/grön
RD = Röd = låg
OG = Orange = medel
BK = Svart = hög
BN = Brun
BU = Mörkblå

LÉGENDE

SEC 1 = Bornier Cassette
SEP = Carte gestion pompe
BLAC = Carte électronique de contrôle
M = Motoventilateur
E = Vanne à eau (installation à 2 tubes)
E1 = Vanne eau chaude ou résistance électrique
E2 = Vanne eau froide
= Eté - air froid
= Hiver - air chaud
T1 = Sonde air
T2 = Sonde de temperature de l'eau / CHANGE-OVER
T3 = Sonde de température minimun T3
Q1 = Interrupteur avec une pôle protégé par fusible (recommandé)
EH = Résistance électrique
IAQ = Filtre electronique
MP = Pompe d'evacuation des condensats
B2 = Thermostat à réarmement automatique
B3 = Thermostat à réarmement manuel

GNYE = Juane/Vert
RD = Rouge = Mini
OG = Orange = Moyenne
BK = Noir = Maxi
BN = Marron
BU = Bleu foncé

LEGENDE

SEC 1 = Platine Kassetten
SEP = Karte für Pumpenverwaltung
BLAC = Elektronikkarte Inverter
M = Motorventilator
E = Wasserventil (Anlage mit zwei Rohren)
E1 = Warmwasserventil oder Elektrischer Widerstand
E2 = Kaltwasserventil
= Sommer - kalte Luft
= Winter - warme Luft
T1 = Lufttemperaturfühler
T2 = Wassertemperatufuhler / CHANGE-OVER
T3 = Mindesettemperatur-sonde T3
Q1 = Hauptschalter (empfohlen)
EH = Elektrischer Widerstand
IAQ = Elektronsche Filter
MP = Kondensatpumpe
B2 = Thermostat mit automatischem Reset
B3 = Thermostat mit manuellem Reset

GNYE = Gelb/Groen
RD = Rot = Min
OG = Orange = Med
BK = Schwarz = Max
BN = Braun
BU = Blau

LEYENDA

SEC 1 = Tarjeta Cassette del ventiloconvector
SEP = Tarjeta gestión bomba
M = Motoventilador
E = Válvula agua (sistema de climatización a 2 tubos)
E1 = Válvula agua caliente o resistencia eléctrica
E2 = Válvula agua fría
= Verano - aire frio
= Invierno - aire caliente
T1 = Sonde aire
T2 = Sonda de temperatura del agua / CHANGE-OVER
T3 = Sonda T3 de mínima
Q1 = Interruptor de maniobra seccionator de una polo protección con fusible (recomendado)
EH = Resistencia eléctrica
IAQ = Filtre electronico
MP = Bomba de evacuación de condensados
B2 = Termostato de rearme automático
B3 = Termostato de rearme manual

GNYE = Amarillo/Verde
RD = Rojo = Mínima
OG = Naranja = Media
BK = Negro = Máxima
BN = Marrón
BU = Azul

ЛЕГЕНДА

SEC 1 = электронная плата
SEP = Насос управления Электронная карта
BLAC = Электронный инвертор карты
M = Мотовентилятор
E = Водяной клапан (УСТАНОВКА С 2 ТРУБАМИ)
E1 = Клапан ГОРЯЧЕЙ воды или электрического нагревательного элемента
E2 = Клапан ХОЛОДНОЙ воды
= Лето - холодный воздух
= Зима - горячий воздух
T1 = зонд воздуха
T2 =Температурный зонд воды / Смена сезона внешним устройством
T3 = Зонд минимальной температуры T3
Q1 = Отсекающий выключатель с полюсом, защищённым плавким предохранителем (рекомендуется)
EH = Электрический нагревательный элемент
IAQ = Электрический фильтр
MP = Насос для вывода конденсата
B2 = Предохранительный термостат с автоматической перезарядкой
B3 = Предохранительный термостат с ручной перезарядкой

GNYE = Жёлтый/Зелёный
RD = Красный = Минимальная
OG = Оранжевый = Средняя
BK = Чёрный = Максимальная
BN = Коричневый
BU = Синий

A
- Impianto senza valvole
- Termostatazione sul motore

A
- Utan ventilinstallation
- Termostatstyrning av fläkten

A
- Installation sans vannes
- Thermostat sur le ventilateur

A
- Ohne ventile-System
- Temperaturregelung am Ventilator

A
- Instalación sin válvulas
- Termostatación sobre el ventilador

A
- Установка без клапанов
- Термостатическое устройство на двигателе

B
- Impianto 2 tubi (1 valvola)
- Termostatazione sulla valvola

B
- Installation med 2 rör (1 ventil)
- Termostatstyrning av ventilen

B
- Installation à 2 tubes (1 vanne)
- Thermostatation sur le vanne

B
- 2-Leiter-System (1 Ventil)
- Temperaturregelung der Ventil

B
- Instalación con 2 tubos (1 válvula)
- Termostatación sobre la válvula

B
- Установка с 2 трубами (1 клапан)
- Термостатическое устройство на клапане

C
- Impianto 4 tubi (2 valvole)
- Termostatazione sulle valvole

C
- Installation med 4 rör (2 ventiler)
- Termostatstyrning av ventilerna

C
- Installation à 4 tubes (2 vannes)
- Thermostatation sur les vannes

C
- 4-Leiter-System (2 Ventilen)
- Temperaturregelung der Ventile

C
- Instalación con 4 tubos (2 válvulas)
- Termostatación sobre las válvulas

C
- Установка с 4 трубами (2 клапана)
- Термостатическое устройство на клапанах

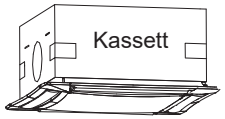

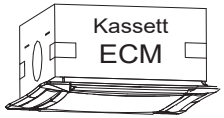

		APPARAT KONFIGURATION						
		MOTOR		VENTILER		PUMP	ELVÄRME	EL. FILTER
TYP	WIRING ID	AC	EC	E	E1 E2	MP	EH	IAQ
KASSETT	SE-0476	✓				✓		
	SE-0477	✓		✓	✓	✓		
	SE-0478	✓				✓	✓	
				✓		✓	✓	
	SE-0479	✓				✓		✓
				✓		✓		✓
	SE-0480		✓			✓		
	SE-0481		✓	✓	✓	✓		
	SE-0482		✓			✓	✓	
				✓		✓	✓	
FLÄKT-KONVEKTOR	SE-0483	✓						
				✓	✓			
	SE-0484	✓					✓	
				✓	✓		✓	
	SE-0485	✓				✓		
				✓	✓	✓		
	SE-0486	✓				✓	✓	
				✓	✓	✓	✓	
	SE-0487	✓						✓
				✓	✓			✓
	SE-0488	✓				✓		✓
				✓	✓	✓		✓
	SE-0489		✓					
				✓	✓			
	SE-0490		✓				✓	
				✓	✓		✓	
	SE-0491		✓			✓		
				✓	✓	✓		
	SE-0492		✓			✓	✓	
				✓	✓	✓	✓	
	SE-0493		✓					✓
				✓	✓			✓
	SE-0494		✓			✓		✓
				✓	✓	✓		✓

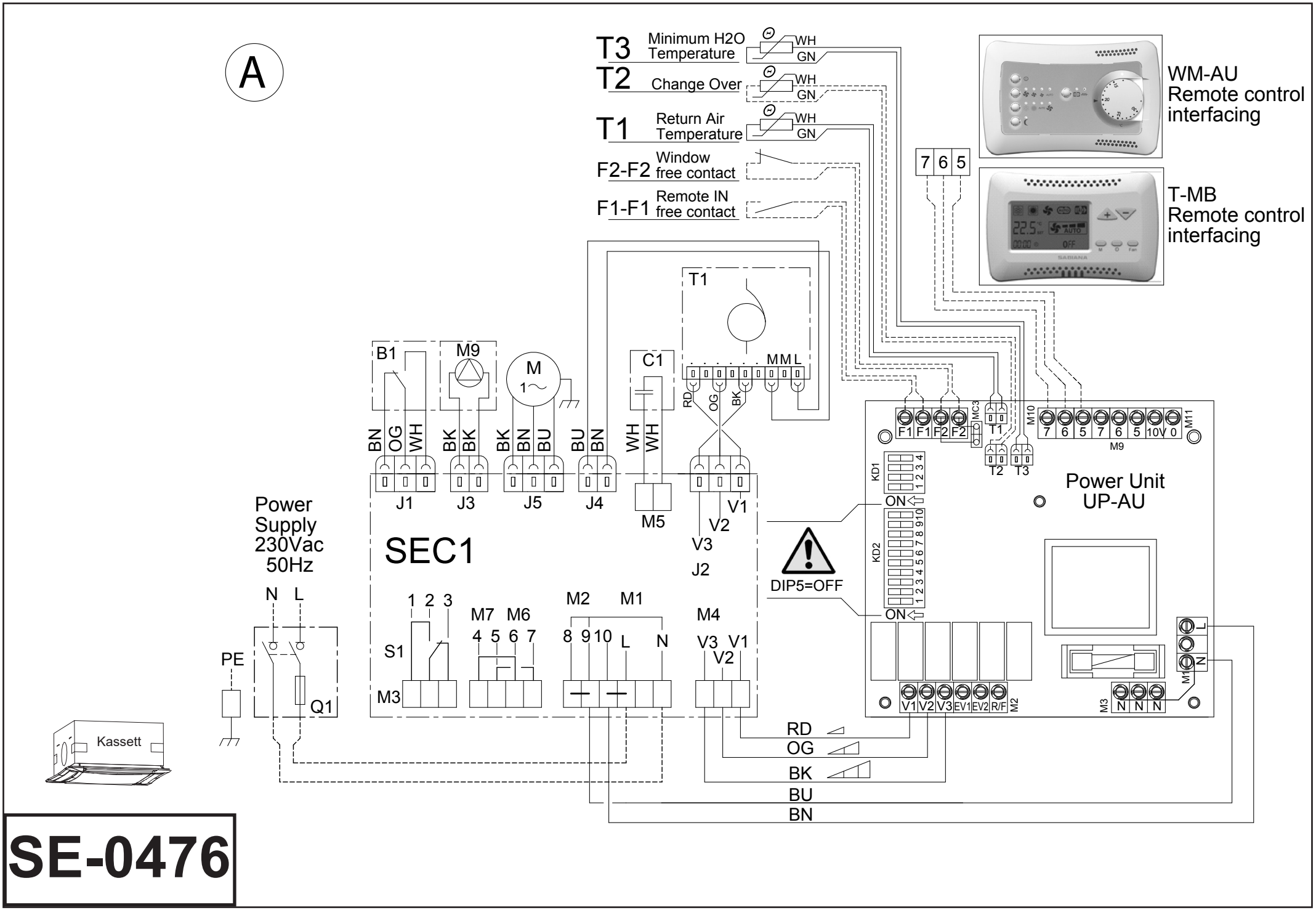
A
T3 Minimum H2O Temperature
T2 Change Over
T1 Return Air Temperature
F2-F2 Window free contact
F1-F1 Remote IN free contact
WH
GN
WM-AU
Remote control
interfacing
T-MB
Remote control
interfacing
7 6 5
T1
MM L
RD
OG
BK
B1
M9
M
1~
C1
BN OG WH
BK BK
BK BN BU
BU BN
WH WH
J1
J3
J5
J4
M5
V1
V2
V3
J2
SEC1
S1
M3
1 2 3
M7 M6
4 5 6 7
M2 M1
8 9 10 L N
M4
V3 V1
V2
Power
Supply
230Vac
50Hz
N L
PE
Q1
Kassett
DIP5=OFF
ON
KD1
KD2
F1 F1 F2 F2
MC3
T1
T2 T3
M10
7 6 5 7 6 5 10V 0
M11
M9
Power Unit
UP-AU
V1 V2 V3 EV1 EV2 R/F
M2
M3
N N N
M1
L
N
RD
OG
BK
BU
BN

SE-0476

B

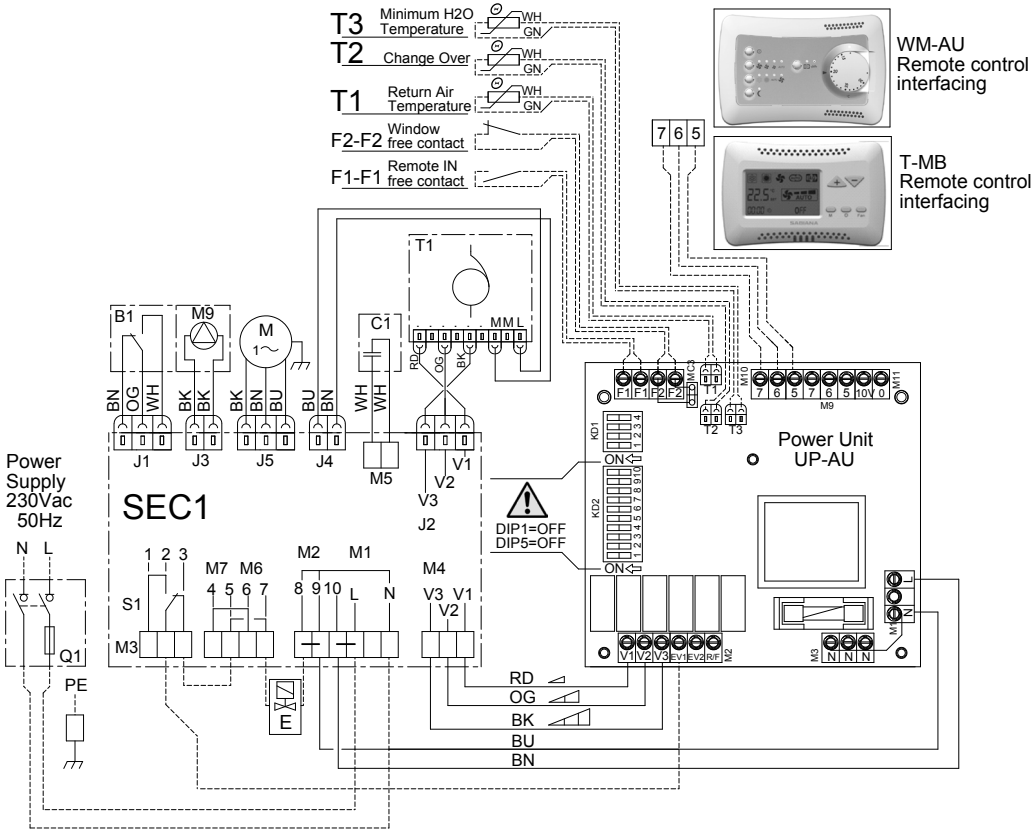
T3 Minimum H2O Temperature
T2 Change Over
T1 Return Air Temperature
F2-F2 Window free contact
F1-F1 Remote IN free contact
WM-AU Remote control interfacing
T-MB Remote control interfacing
Power Supply 230Vac 50Hz
SEC1
Power Unit UP-AU
DIP1=OFF
DIP5=OFF
RD
OG
BK
BU
BN

C

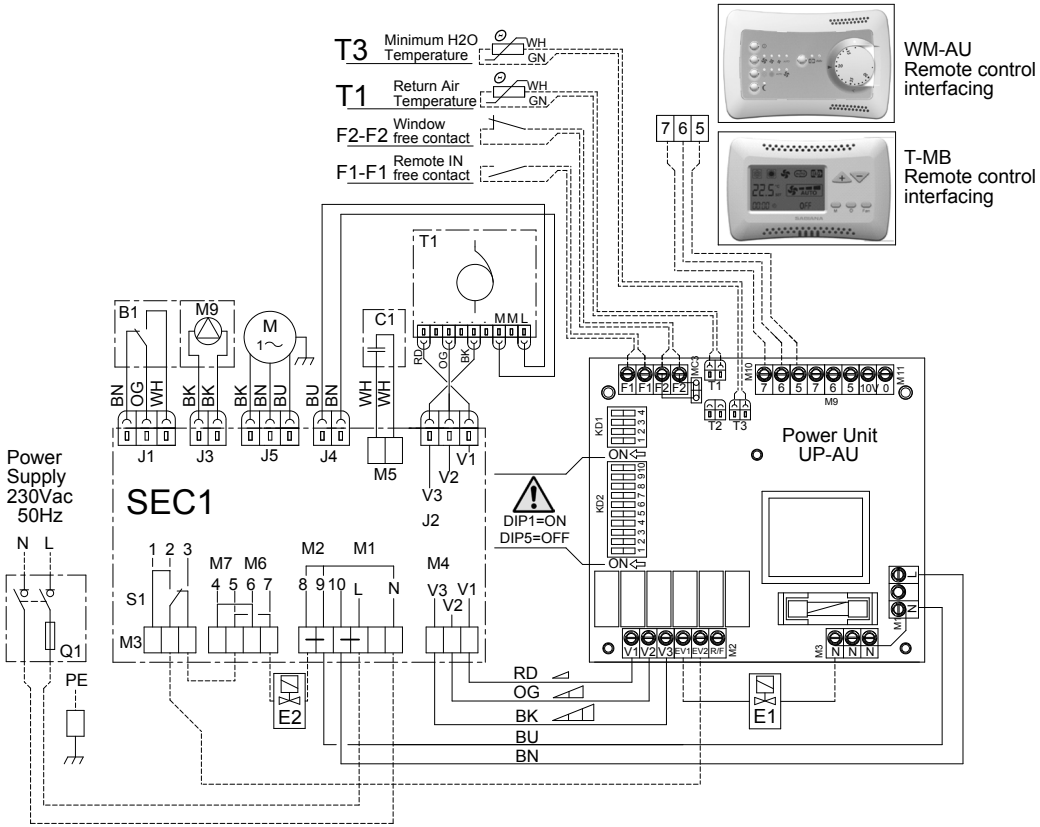
T3 Minimum H2O Temperature
T1 Return Air Temperature
F2-F2 Window free contact
F1-F1 Remote IN free contact
WM-AU Remote control interfacing
T-MB Remote control interfacing
Power Supply 230Vac 50Hz
SEC1
Power Unit UP-AU
DIP1=ON
DIP5=OFF
RD
OG
BK
BU
BN

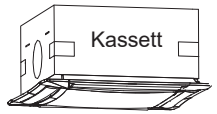
Kassett

SE-0477

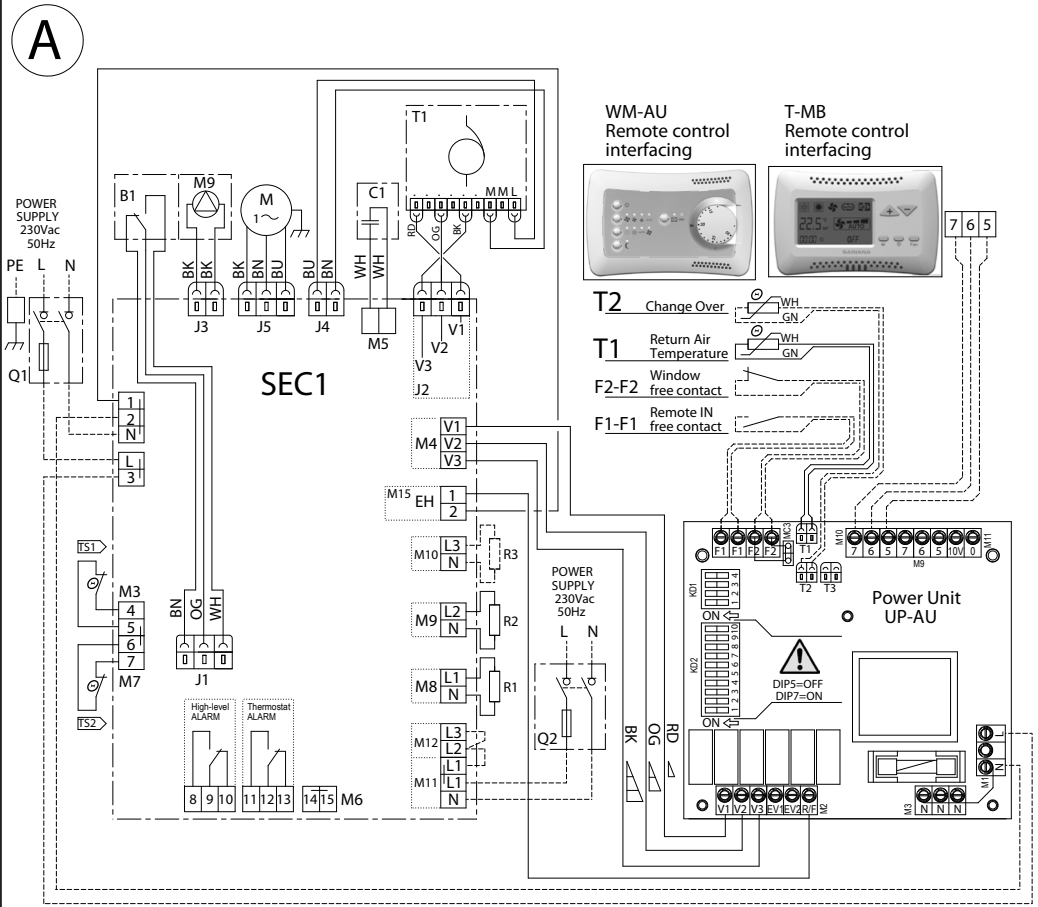
A
POWER SUPPLY 230Vac 50Hz
PE L N
Q1
B1
M9
M
1~
C1
T1
MML
RD OG BK
BK BK BK BN BU BU BN WH WH
J3 J5 J4 M5
V1 V2 V3
J2
SEC1
WM-AU Remote control interfacing
T-MB Remote control interfacing
7 6 5
T2 Change Over
T1 Return Air Temperature
F2-F2 Window free contact
F1-F1 Remote IN free contact
WH GN
M4 V1 V2 V3
M15 EH 1 2
M10 L3 N R3
M9 L2 N R2
M8 L1 N R1
M12 L3 L2
M11 L1 L1 N
TS1
M3
BN OG WH
J1
M7
TS2
High-level ALARM
Thermostat ALARM
8 9 10 11 12 13 14 15 M6
POWER SUPPLY 230Vac 50Hz
L N
Q2
BK OG RD
F1 F1 F2 F2 MC3 T1 T2 T3
M10 7 6 5 7 6 5 10V 0 M11
M9
KD1 KD2
ON
DIP5=OFF
DIP7=ON
Power Unit UP-AU
V1 V2 V3 EV1 EV2 R/F M2
M1 N N N

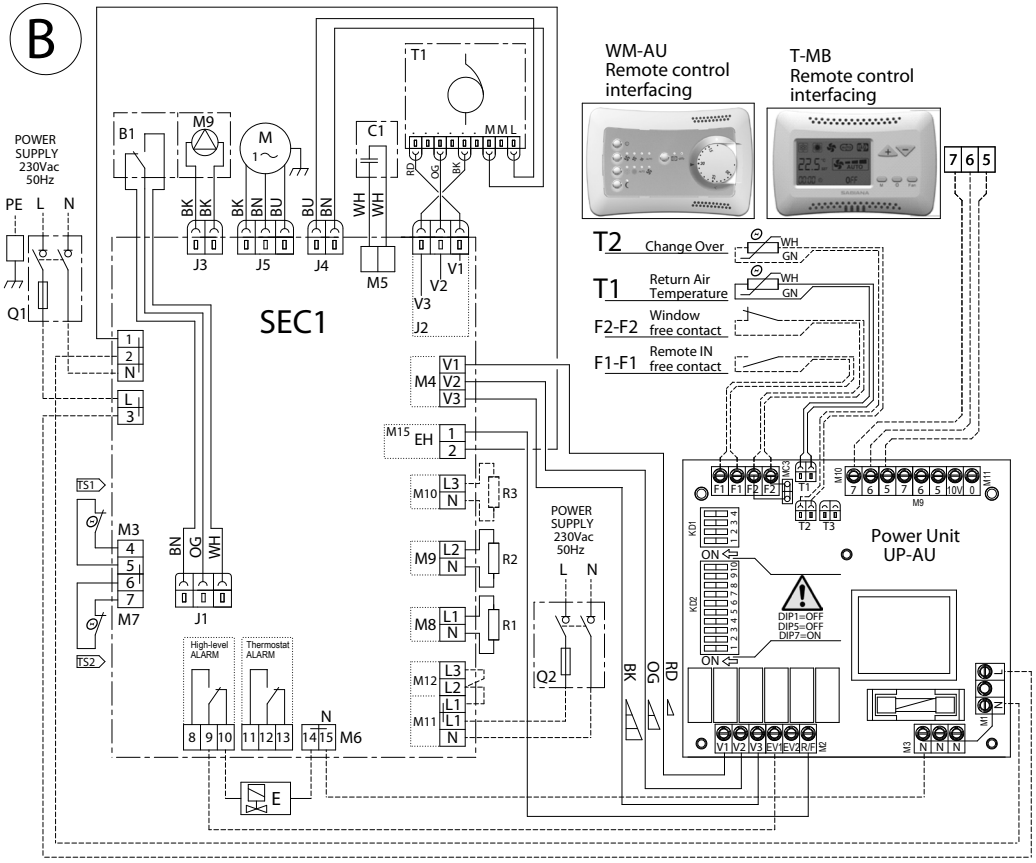
B
POWER SUPPLY 230Vac 50Hz
PE L N
Q1
B1
M9
M
1~
C1
T1
MML
RD OG BK
BK BK BK BN BU BU BN WH WH
J3 J5 J4 M5
V1 V2 V3
J2
SEC1
WM-AU Remote control interfacing
T-MB Remote control interfacing
7 6 5
T2 Change Over
T1 Return Air Temperature
F2-F2 Window free contact
F1-F1 Remote IN free contact
WH GN
M4 V1 V2 V3
M15 EH 1 2
M10 L3 N R3
M9 L2 N R2
M8 L1 N R1
M12 L3 L2
M11 L1 L1 N
TS1
M3
BN OG WH
J1
M7
TS2
High-level ALARM
Thermostat ALARM
8 9 10 11 12 13 14 15 M6
E
POWER SUPPLY 230Vac 50Hz
L N
Q2
BK OG RD
F1 F1 F2 F2 MC3 T1 T2 T3
M10 7 6 5 7 6 5 10V 0 M11
M9
KD1 KD2
ON
DIP1=OFF
DIP5=OFF
DIP7=ON
Power Unit UP-AU
V1 V2 V3 EV1 EV2 R/F M2
M1 N N N

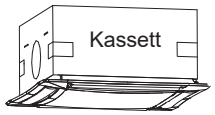
Kassett

SE-0478

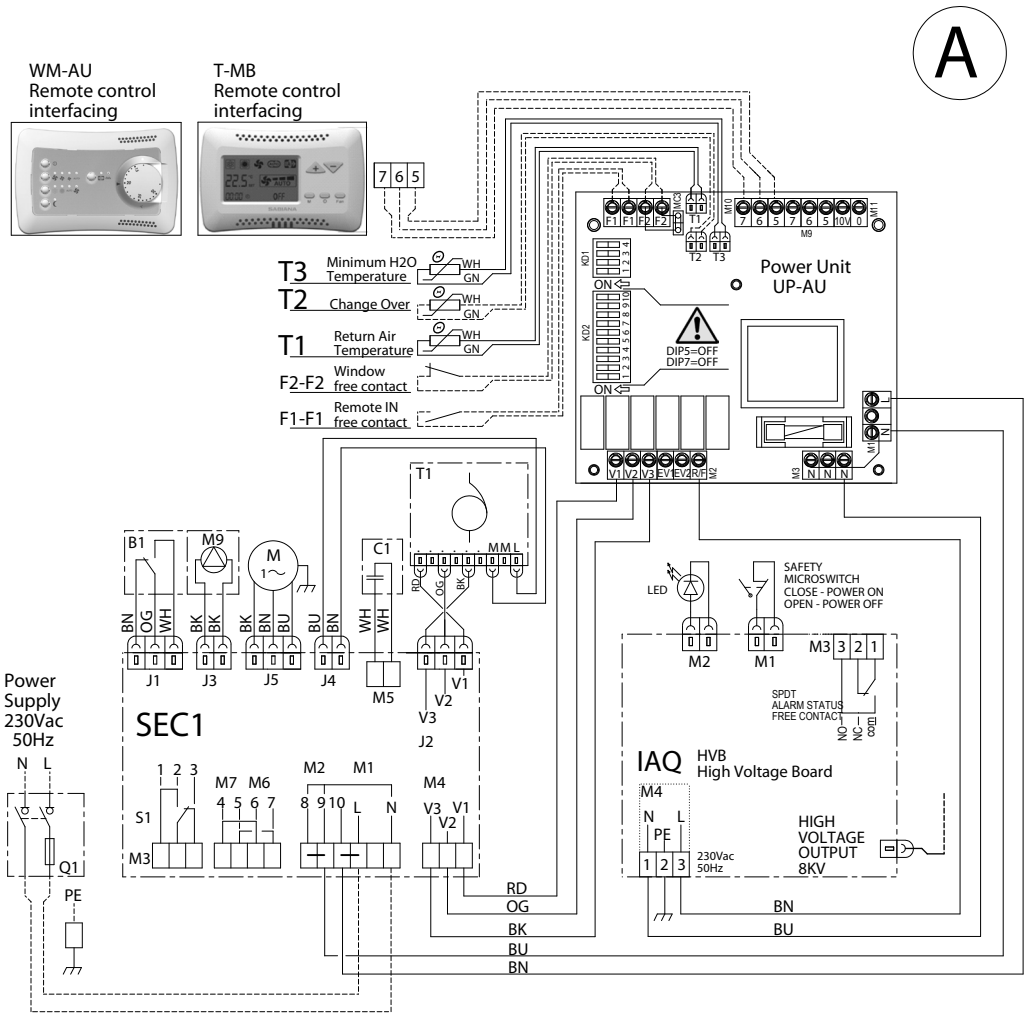
A
WM-AU
Remote control
interfacing
T-MB
Remote control
interfacing
T3 Minimum H2O Temperature
T2 Change Over
T1 Return Air Temperature
F2-F2 Window free contact
F1-F1 Remote IN free contact
Power Unit
UP-AU
DIP5=OFF
DIP7=OFF
SEC1
Power Supply 230Vac 50Hz
LED
SAFETY MICROSWITCH CLOSE - POWER ON OPEN - POWER OFF
SPDT ALARM STATUS FREE CONTACT
IAQ HVB High Voltage Board
HIGH VOLTAGE OUTPUT 8KV
230Vac 50Hz
RD
OG
BK
BU
BN

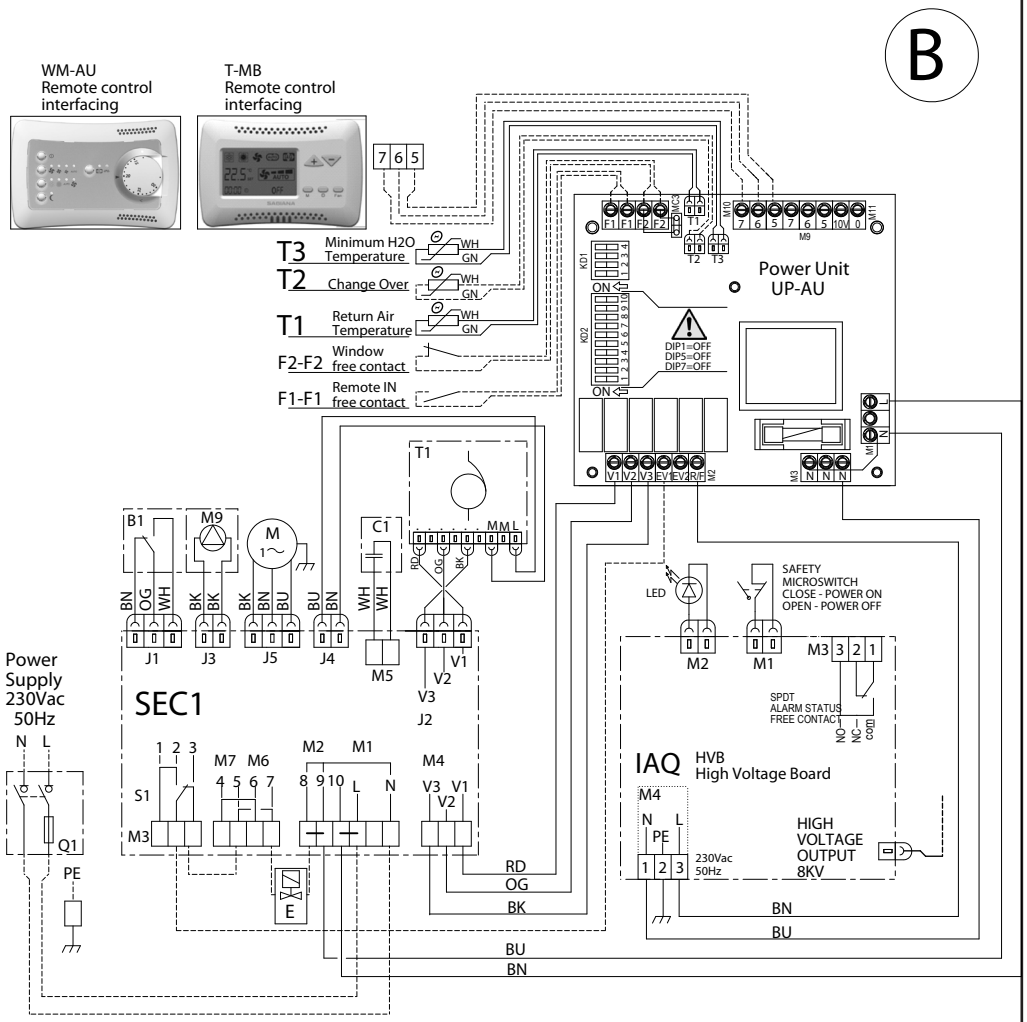
B
WM-AU
Remote control
interfacing
T-MB
Remote control
interfacing
T3 Minimum H2O Temperature
T2 Change Over
T1 Return Air Temperature
F2-F2 Window free contact
F1-F1 Remote IN free contact
Power Unit
UP-AU
DIP1=OFF
DIP5=OFF
DIP7=OFF
SEC1
Power Supply 230Vac 50Hz
LED
SAFETY MICROSWITCH CLOSE - POWER ON OPEN - POWER OFF
SPDT ALARM STATUS FREE CONTACT
IAQ HVB High Voltage Board
HIGH VOLTAGE OUTPUT 8KV
230Vac 50Hz
RD
OG
BK
BU
BN

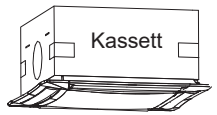
Kassett

SE-0479

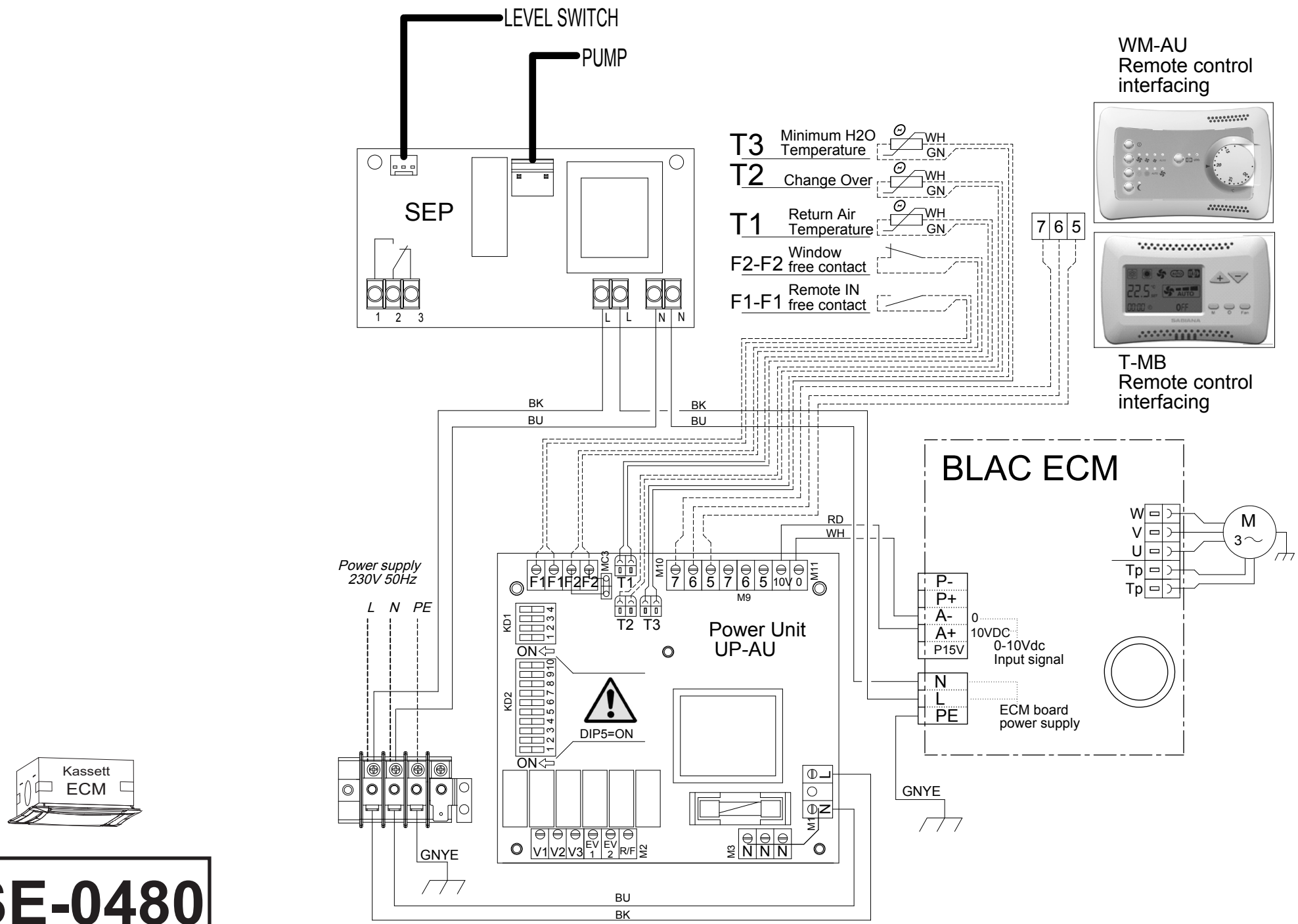
LEVEL SWITCH
PUMP
SEP
1 2 3
L L N N
T3 Minimum H2O Temperature
T2 Change Over
T1 Return Air Temperature
F2-F2 Window free contact
F1-F1 Remote IN free contact
WH
GN
7 6 5
WM-AU
Remote control interfacing
T-MB
Remote control interfacing
BK
BU
BLAC ECM
W
V
U
Tp
Tp
M
3~
RD
WH
Power supply
230V 50Hz
L N PE
F1 F1 F2 F2 MC3 T1 T2 T3
M10 7 6 5 7 6 5 10V 0 M11
M9
KD1
KD2
ON
DIP5=ON
Power Unit
UP-AU
P-
P+
A-
A+
P15V
0
10VDC
0-10Vdc
Input signal
N
L
PE
ECM board
power supply
GNYE
V1 V2 V3 EV 1 EV 2 R/F M2
M3 N N N
M1 L N
Kassett
ECM
SE-0480

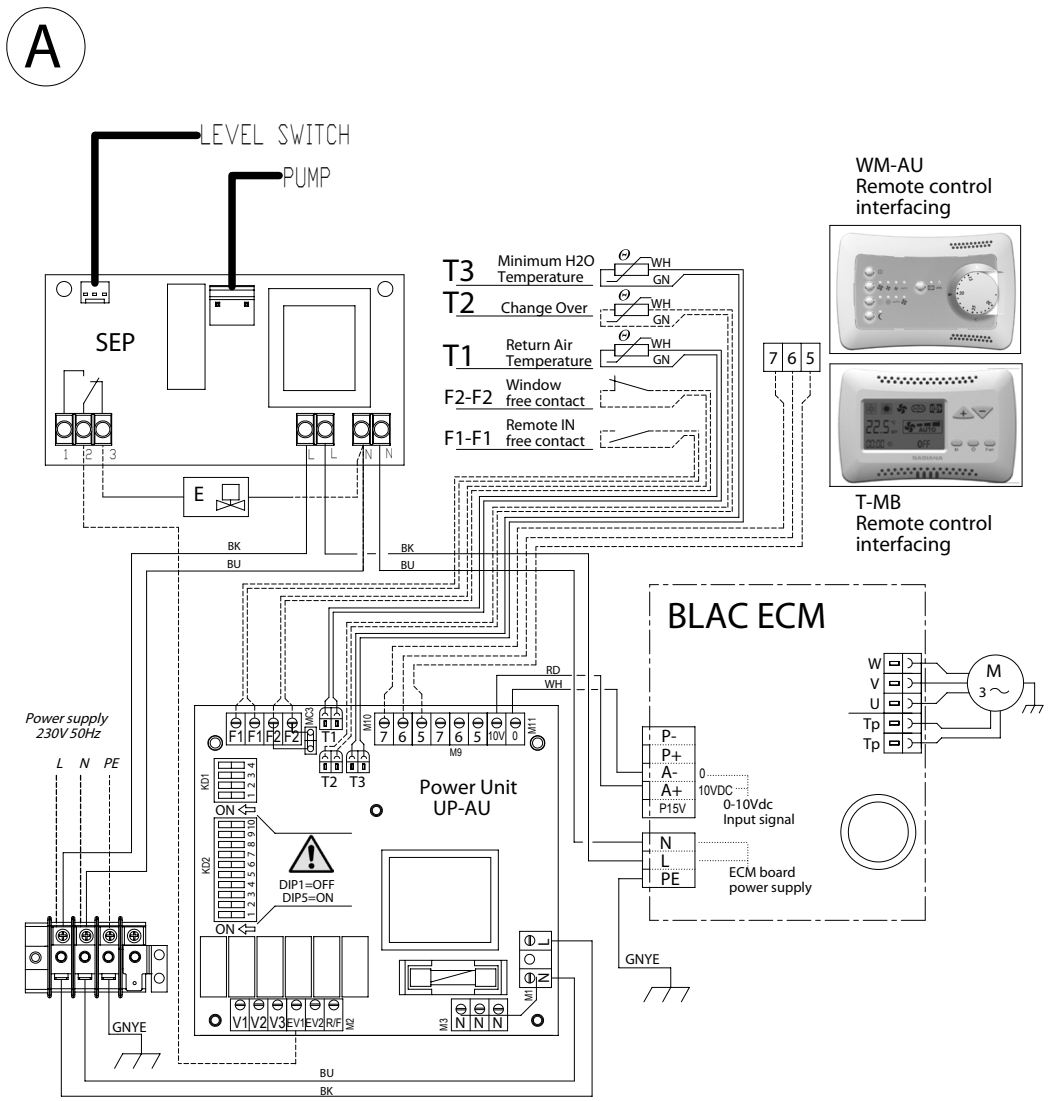
A
LEVEL SWITCH
PUMP
SEP
E
T3 Minimum H2O Temperature
T2 Change Over
T1 Return Air Temperature
F2-F2 Window free contact
F1-F1 Remote IN free contact
WH
GN
WM-AU
Remote control interfacing
T-MB
Remote control interfacing
BLAC ECM
Power supply 230V 50Hz
L N PE
Power Unit UP-AU
DIP1=OFF
DIP5=ON
P- P+ A- A+ P15V
0-10Vdc Input signal
N L PE
ECM board power supply
M 3~
W V U Tp Tp
GNYE
BK
BU
RD
WH

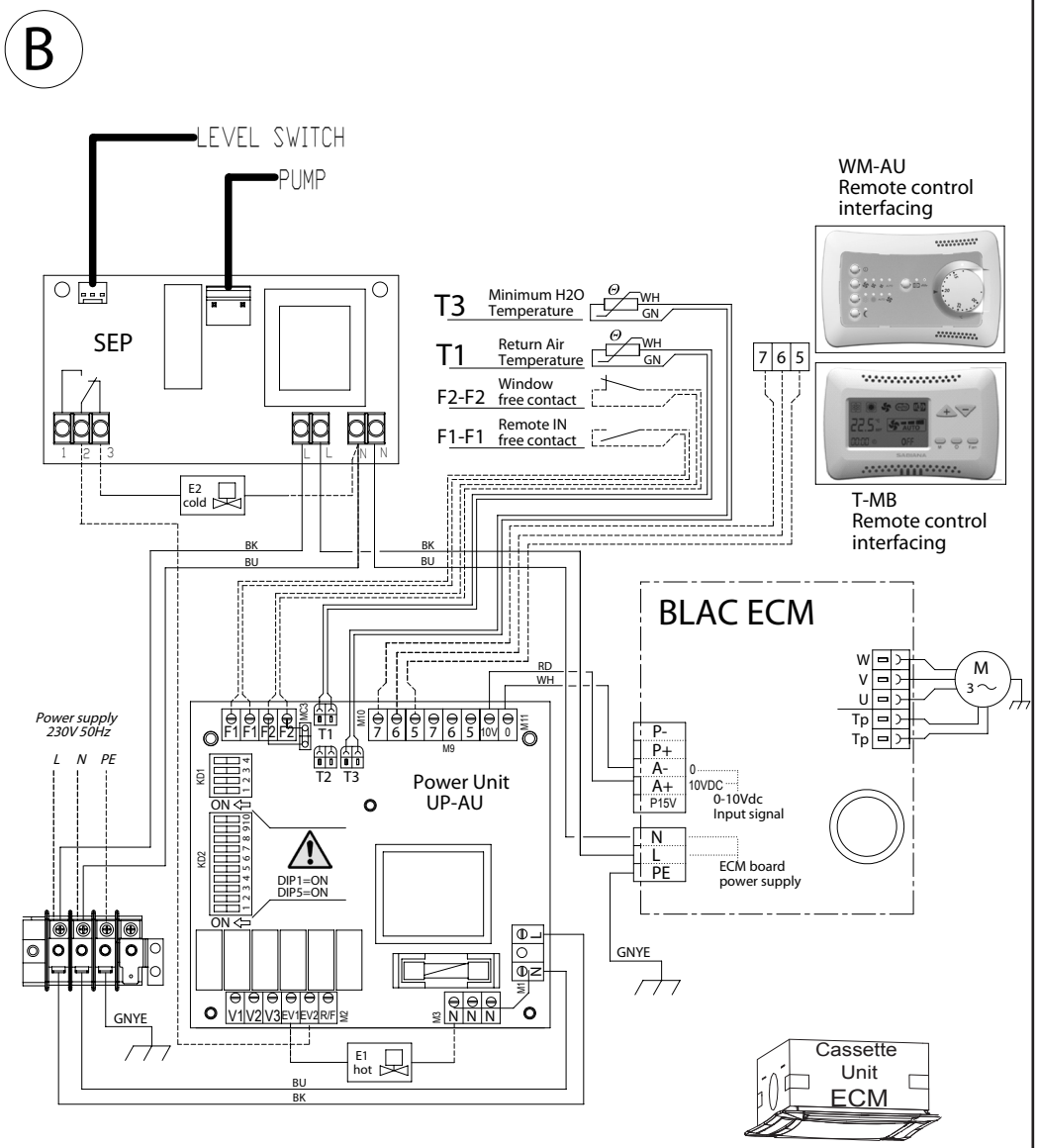
B
LEVEL SWITCH
PUMP
SEP
E2 cold
E1 hot
T3 Minimum H2O Temperature
T1 Return Air Temperature
F2-F2 Window free contact
F1-F1 Remote IN free contact
WH
GN
WM-AU
Remote control interfacing
T-MB
Remote control interfacing
BLAC ECM
Power supply 230V 50Hz
L N PE
Power Unit UP-AU
DIP1=ON
DIP5=ON
P- P+ A- A+ P15V
0-10Vdc Input signal
N L PE
ECM board power supply
M 3~
W V U Tp Tp
GNYE
BK
BU
RD
WH
Cassette Unit ECM

SE-0481

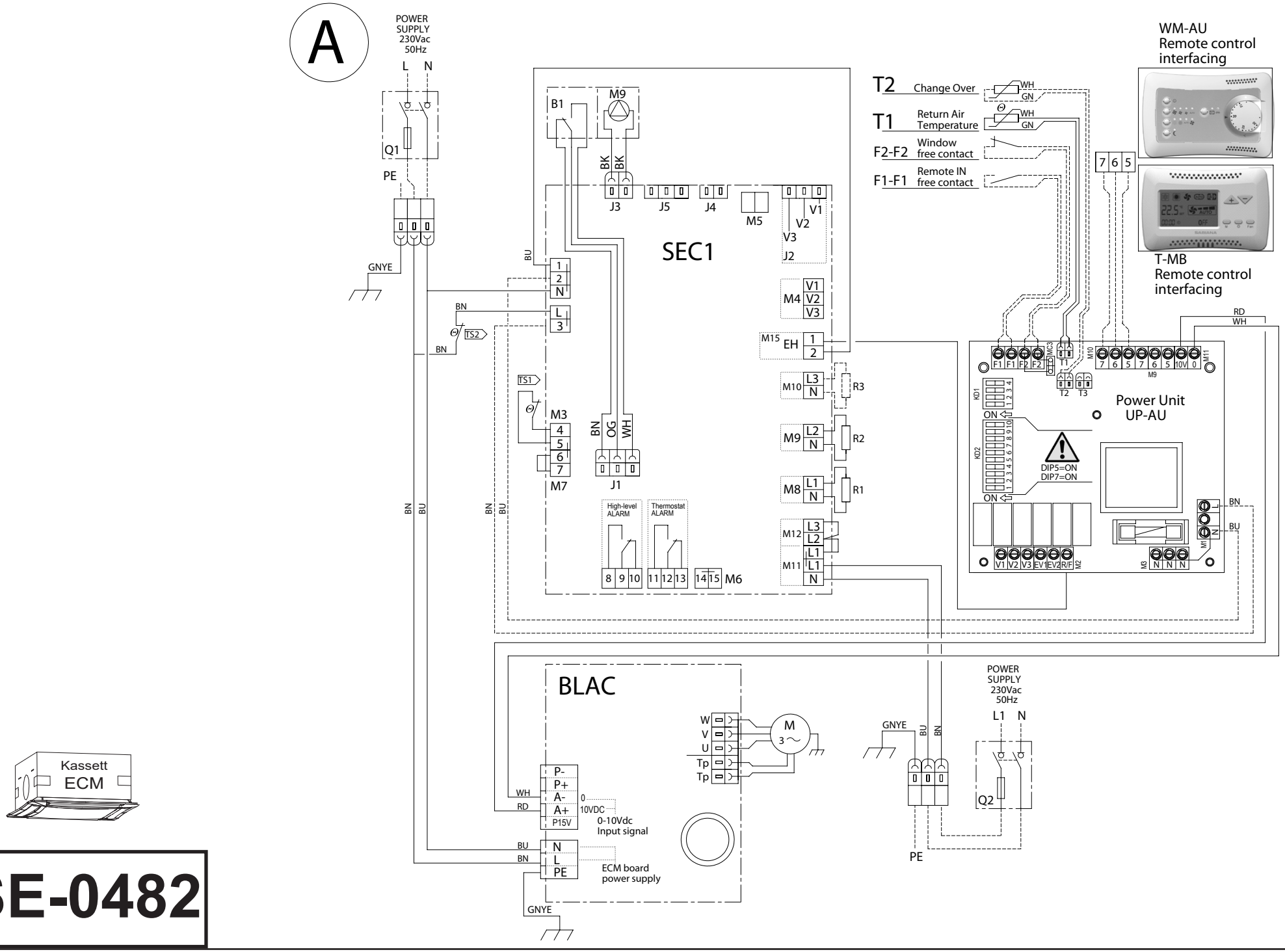
A
POWER SUPPLY 230Vac 50Hz
L N
Q1
PE
GNYE
SEC1
B1
M9
J3
J5
J4
M5
V1
V2
V3
J2
M4
M15
EH
M10
M9
M8
M12
M11
R3
R2
R1
M3
M7
J1
High-level ALARM
Thermostat ALARM
M6
TS1
TS2
T2 Change Over
T1 Return Air Temperature
F2-F2 Window free contact
F1-F1 Remote IN free contact
WM-AU Remote control interfacing
T-MB Remote control interfacing
Power Unit UP-AU
DIP5=ON
DIP7=ON
BLAC
P-
P+
A-
A+
P15V
0-10Vdc Input signal
N
L
PE
ECM board power supply
M 3~
W
V
U
Tp
Tp
POWER SUPPLY 230Vac 50Hz
L1 N
Q2
Kassett ECM

SE-0482

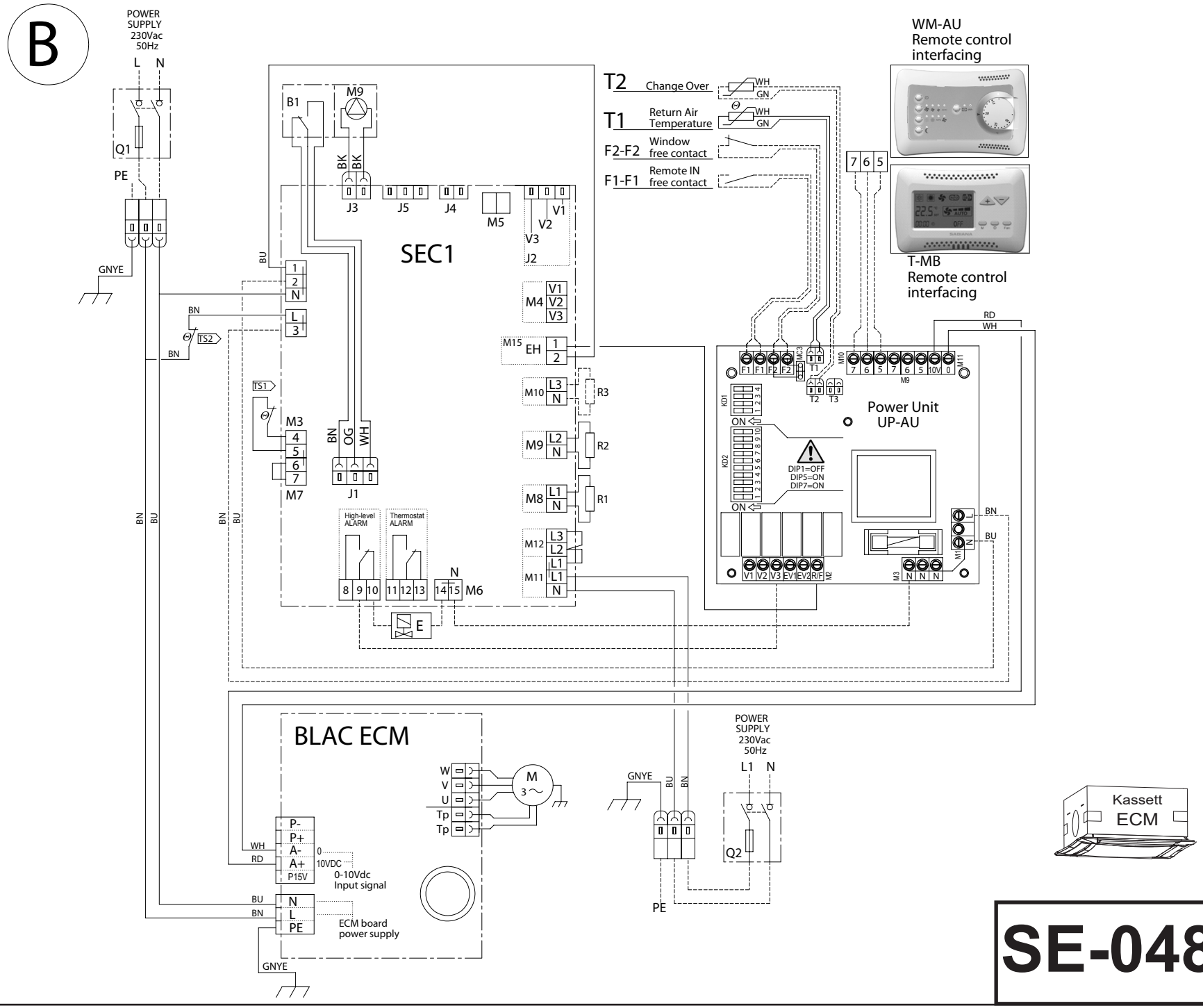
B
POWER SUPPLY 230Vac 50Hz
L N
Q1
PE
GNYE
SEC1
B1
M9
J3
J5
J4
M5
V1
V2
V3
J2
M4
M15
EH
M10
M9
M8
M12
M11
R3
R2
R1
M3
M7
J1
TS1
TS2
High-level ALARM
Thermostat ALARM
M6
E
T2 Change Over
T1 Return Air Temperature
F2-F2 Window free contact
F1-F1 Remote IN free contact
WM-AU Remote control interfacing
T-MB Remote control interfacing
Power Unit UP-AU
DIP1=OFF
DIP5=ON
DIP7=ON
BLAC ECM
0-10Vdc Input signal
ECM board power supply
POWER SUPPLY 230Vac 50Hz
L1 N
Q2
Kassett ECM
SE-0482

Fläkt-
konvektor

SE-0483

A

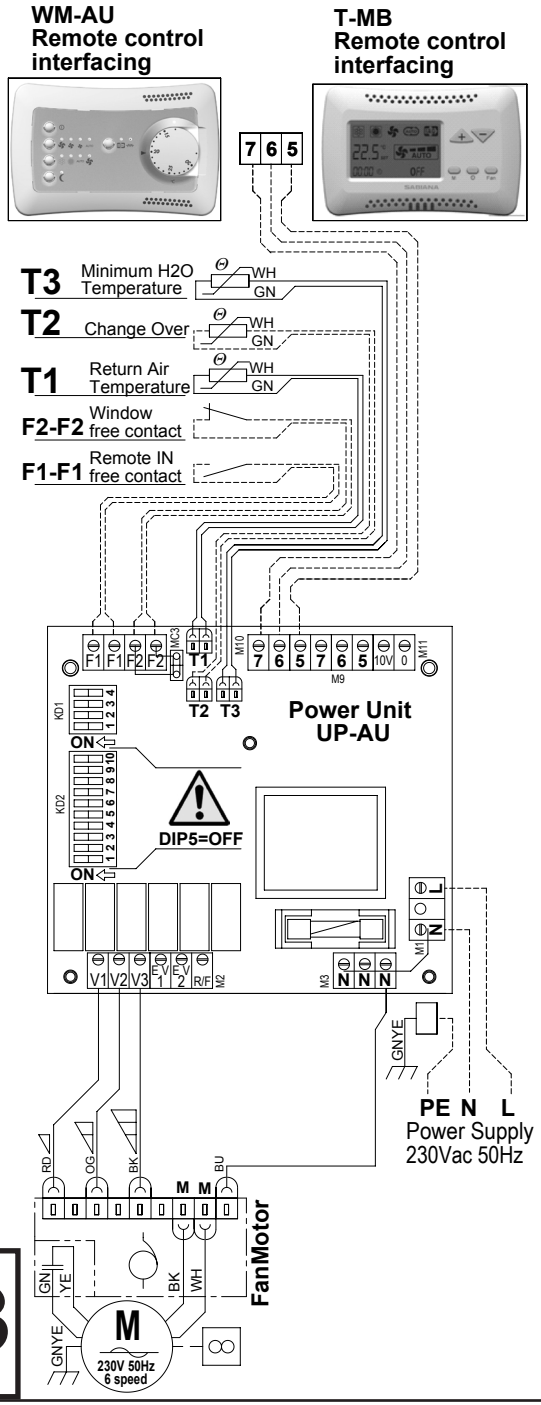
WM-AU
Remote control
interfacing
T-MB
Remote control
interfacing
7 6 5
T3 Minimum H2O Temperature
T2 Change Over
T1 Return Air Temperature
F2-F2 Window free contact
F1-F1 Remote IN free contact
WH
GN
F1 F1 F2 F2
MC3
T1
M10
7 6 5 7 6 5 10V 0
M11
M9
T2 T3
Power Unit
UP-AU
KD1
KD2
ON
DIP5=OFF
V1 V2 V3 EV 1 EV 2 R/F
M2
M3
N N N
L
N
M1
GNYE
PE N L
Power Supply
230Vac 50Hz
RD
OG
BK
BU
M M
FanMotor
GN
YE
BK
WH
M
230V 50Hz
6 speed

B

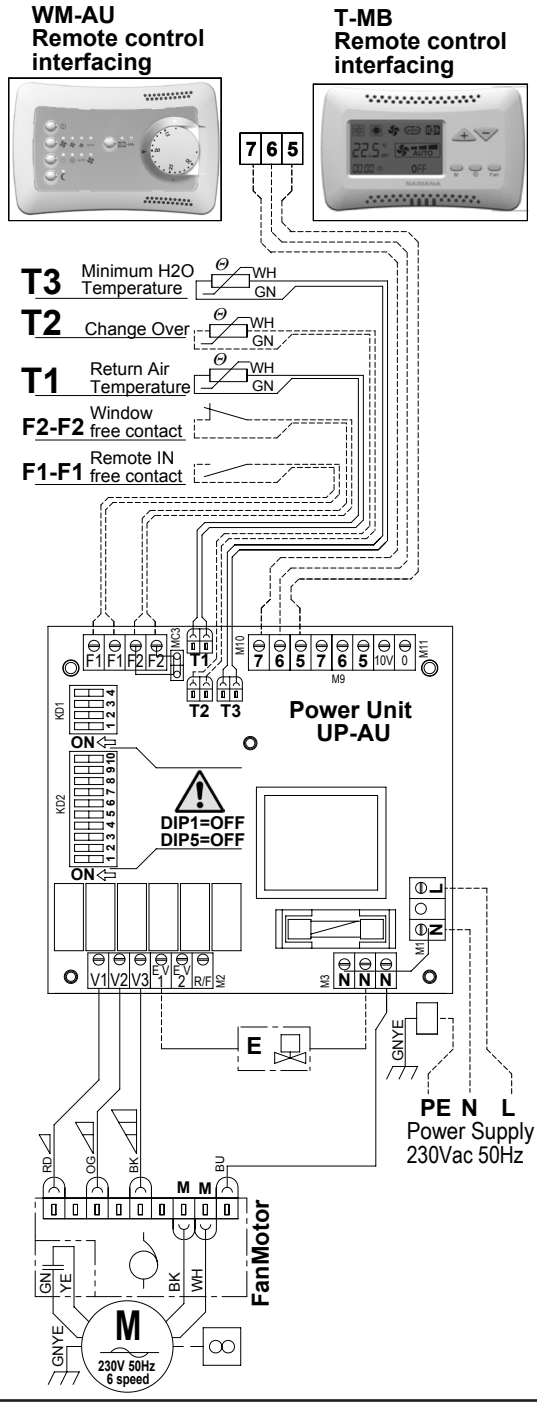
WM-AU
Remote control
interfacing
T-MB
Remote control
interfacing
7 6 5
T3 Minimum H2O Temperature
T2 Change Over
T1 Return Air Temperature
F2-F2 Window free contact
F1-F1 Remote IN free contact
WH
GN
F1 F1 F2 F2
MC3
T1
M10
7 6 5 7 6 5 10V 0
M11
M9
T2 T3
Power Unit
UP-AU
KD1
KD2
ON
DIP1=OFF
DIP5=OFF
V1 V2 V3 EV 1 EV 2 R/F
M2
M3
N N N
L
N
M1
E
GNYE
PE N L
Power Supply
230Vac 50Hz
RD
OG
BK
BU
M M
FanMotor
GN
YE
BK
WH
M
230V 50Hz
6 speed

C

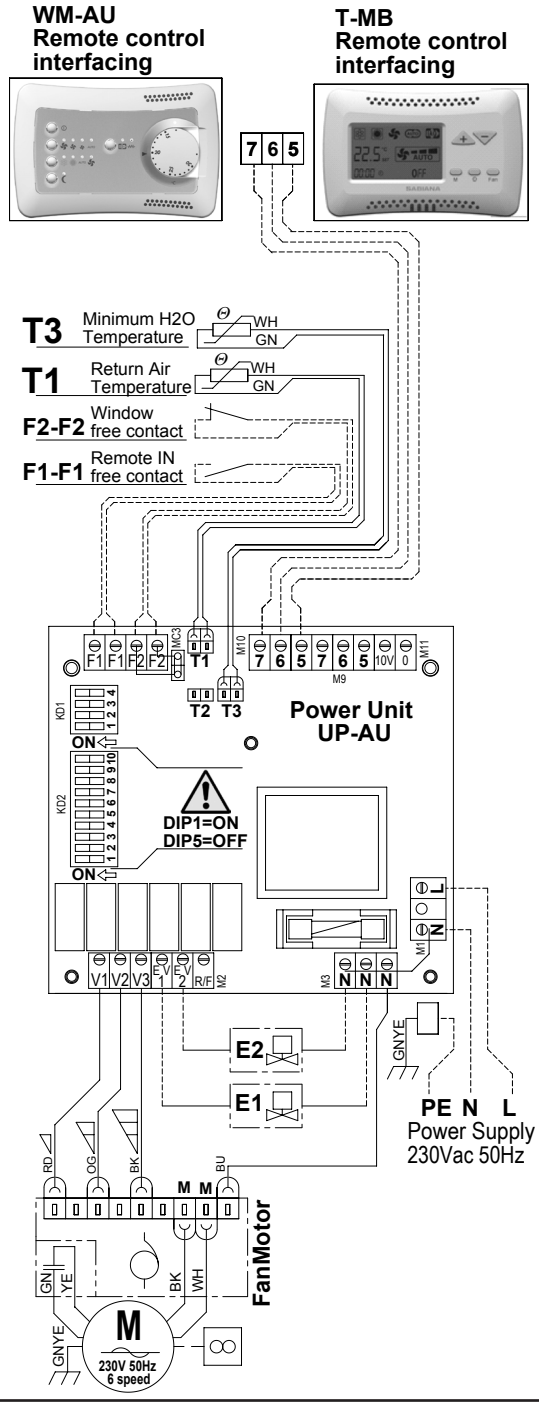
WM-AU
Remote control
interfacing
T-MB
Remote control
interfacing
7 6 5
T3 Minimum H2O Temperature
T1 Return Air Temperature
F2-F2 Window free contact
F1-F1 Remote IN free contact
WH
GN
F1 F1 F2 F2
MC3
T1
M10
7 6 5 7 6 5 10V 0
M11
M9
T2 T3
Power Unit
UP-AU
KD1
KD2
ON
DIP1=ON
DIP5=OFF
V1 V2 V3 EV 1 EV 2 R/F
M2
M3
N N N
L
N
M1
E2
E1
GNYE
PE N L
Power Supply
230Vac 50Hz
RD
OG
BK
BU
M M
FanMotor
GN
YE
BK
WH
M
230V 50Hz
6 speed

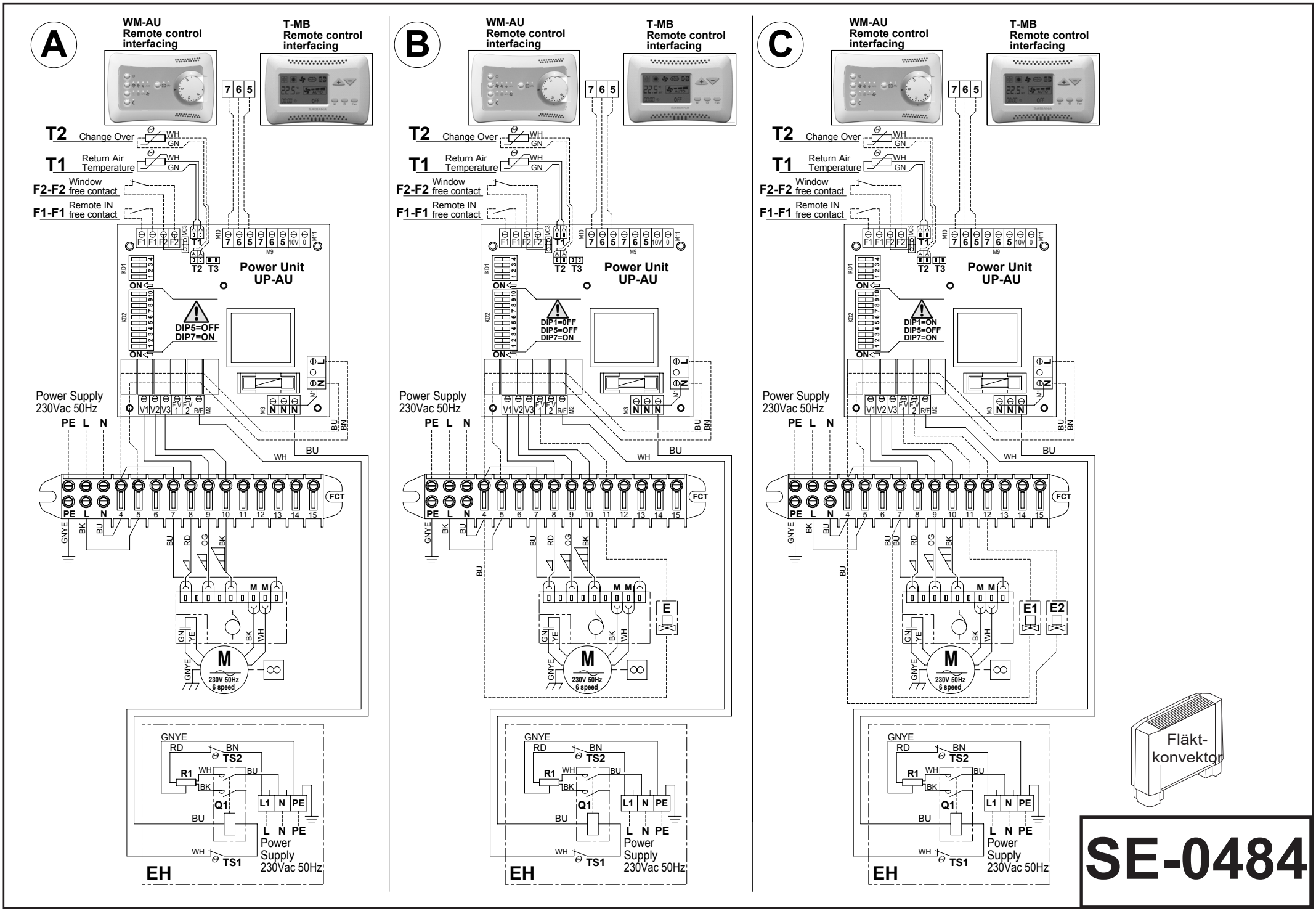
A
B
C
WM-AU
Remote control
interfacing
T-MB
Remote control
interfacing
T2 Change Over
T1 Return Air Temperature
F2-F2 Window free contact
F1-F1 Remote IN free contact
Power Unit
UP-AU
DIP5=OFF
DIP7=ON
DIP1=0FF
DIP5=OFF
DIP7=ON
DIP1=ON
DIP5=OFF
DIP7=ON
Power Supply
230Vac 50Hz
PE L N
FCT
M
230V 50Hz
6 speed
E
E1
E2
TS2
R1
Q1
TS1
L1 N PE
L N PE
Power
Supply
230Vac 50Hz
EH
Fläkt-
konvektor
SE-0484

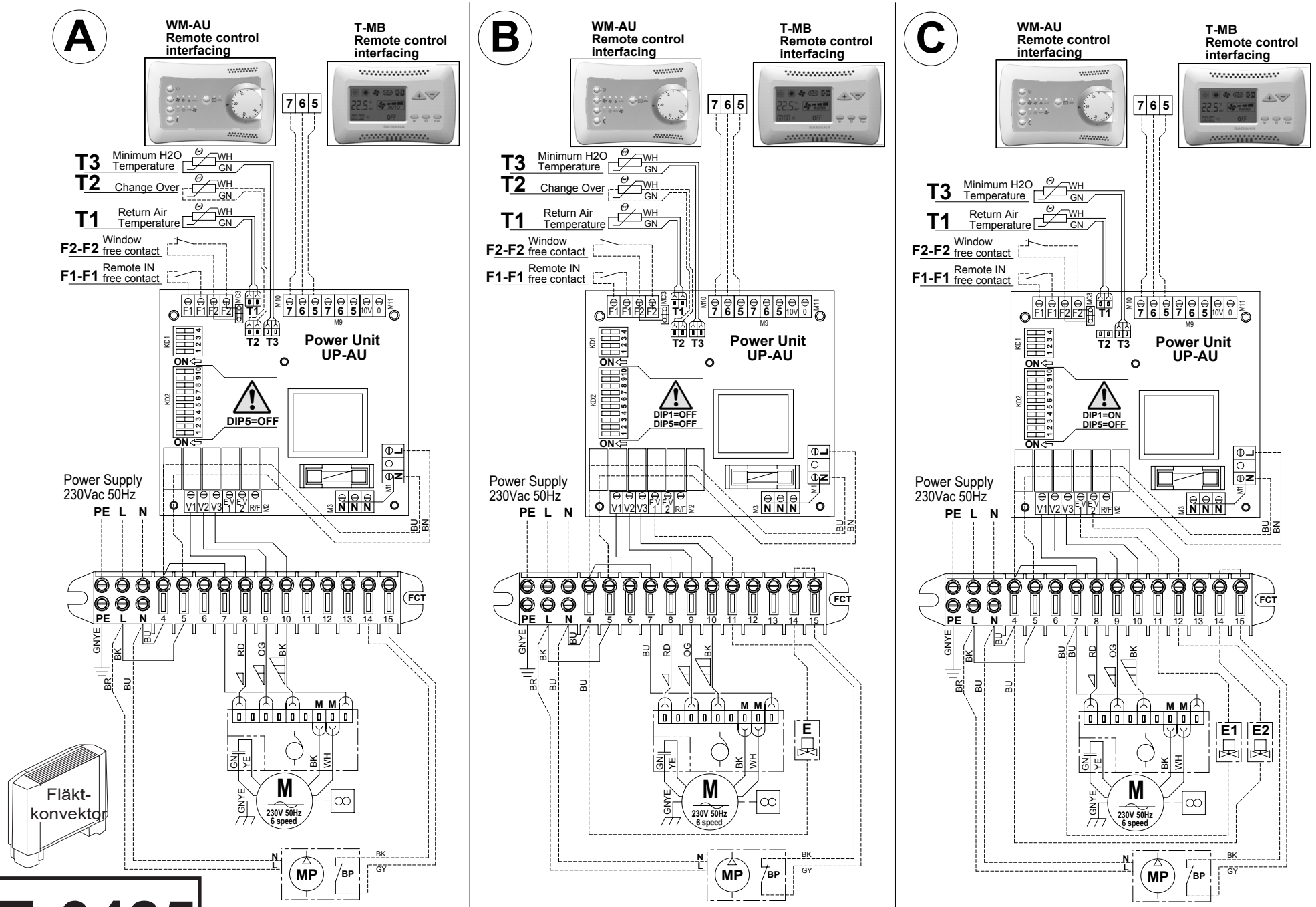
A
B
C
WM-AU
Remote control
interfacing
T-MB
Remote control
interfacing
T3 Minimum H2O Temperature
T2 Change Over
T1 Return Air Temperature
F2-F2 Window free contact
F1-F1 Remote IN free contact
Power Unit
UP-AU
DIP5=OFF
DIP1=OFF
DIP5=OFF
DIP1=ON
DIP5=OFF
Power Supply
230Vac 50Hz
PE L N
FCT
M
230V 50Hz
6 speed
MP
BP
E
E1
E2
Fläkt-
konvektor

SE-0485

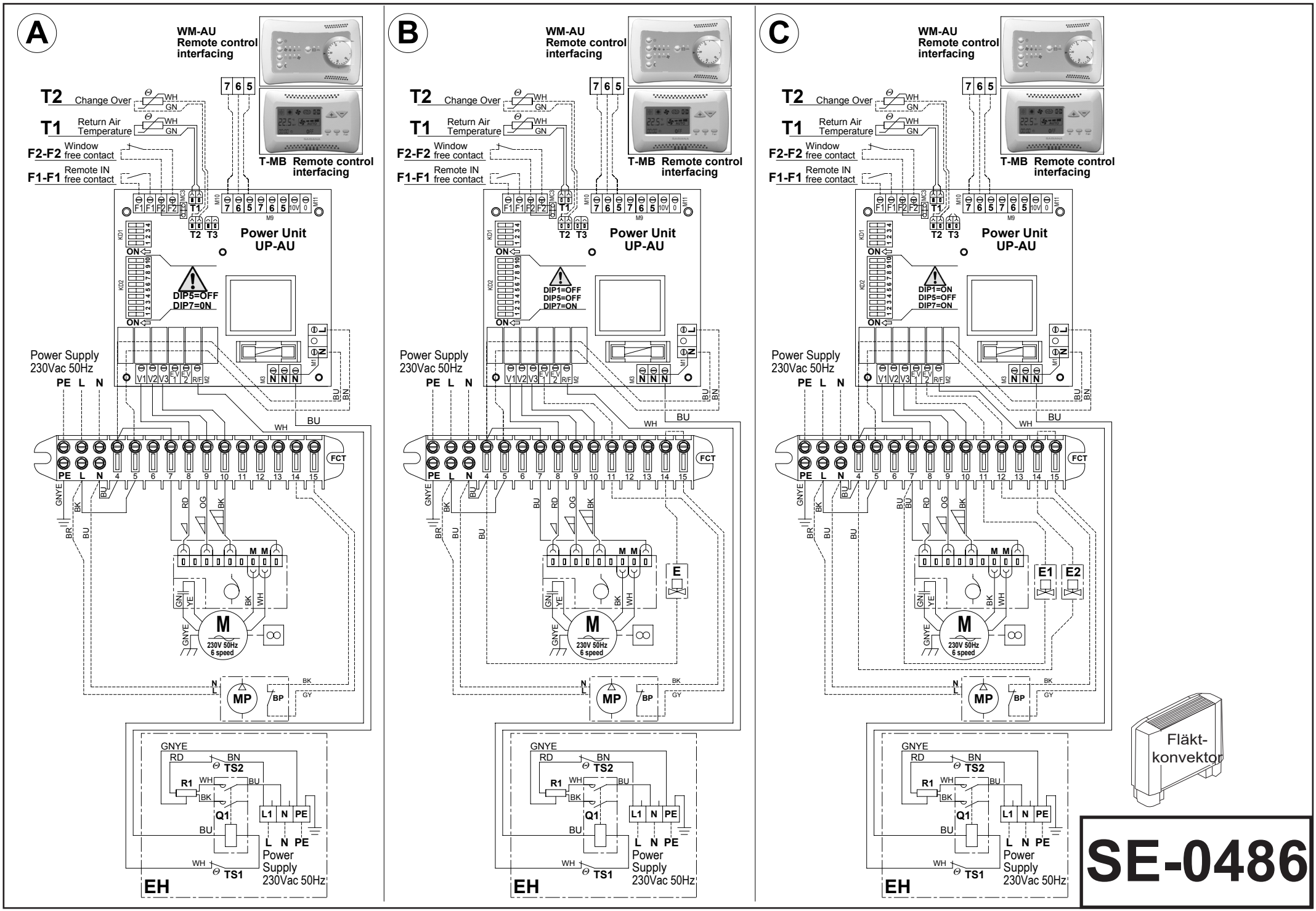
A
B
C
WM-AU
Remote control
interfacing
T-MB Remote control
interfacing
T2 Change Over
T1 Return Air Temperature
F2-F2 Window free contact
F1-F1 Remote IN free contact
Power Unit
UP-AU
DIP5=OFF
DIP7=0N
DIP1=OFF
DIP5=OFF
DIP7=ON
DIP1=ON
DIP5=OFF
DIP7=ON
Power Supply
230Vac 50Hz
PE L N
FCT
M
230V 50Hz
6 speed
MP
BP
E
E1
E2
TS2
R1
Q1
TS1
L1 N PE
L N PE
Power
Supply
230Vac 50Hz
EH
Fläkt-
konvektor
SE-0486

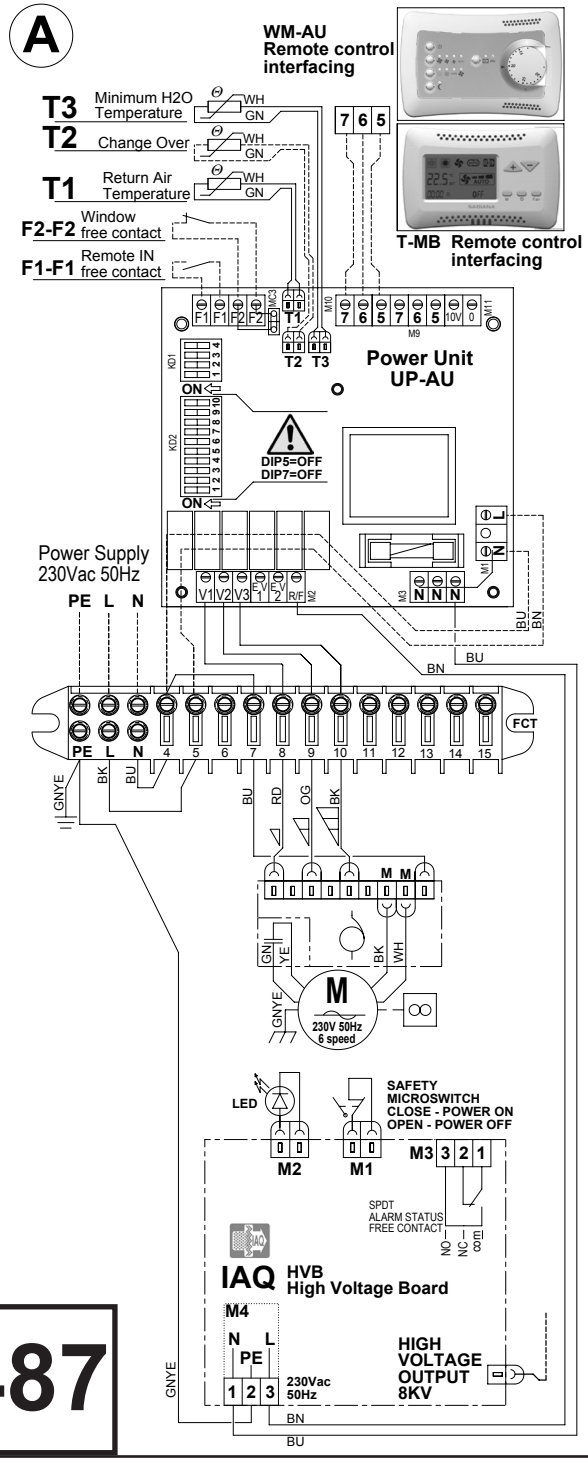
A
WM-AU
Remote control
interfacing
T3 Minimum H2O Temperature
T2 Change Over
T1 Return Air Temperature
F2-F2 Window free contact
F1-F1 Remote IN free contact
T-MB Remote control interfacing
Power Unit
UP-AU
DIP5=OFF
DIP7=OFF
Power Supply
230Vac 50Hz
PE L N
FCT
LED
SAFETY
MICROSWITCH
CLOSE - POWER ON
OPEN - POWER OFF
M2 M1 M3
SPDT
ALARM STATUS
FREE CONTACT
NO NC com
IAQ HVB
High Voltage Board
M4
N PE L
230Vac
50Hz
HIGH
VOLTAGE
OUTPUT
8KV
230V 50Hz
6 speed

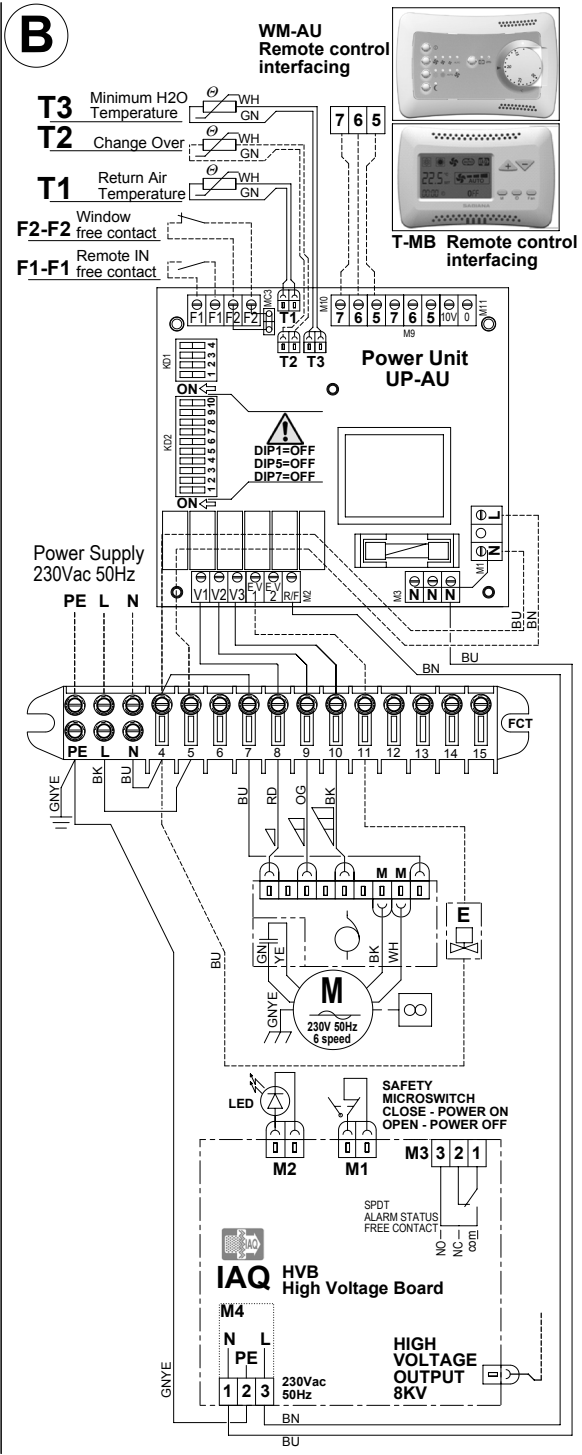
B
WM-AU
Remote control
interfacing
T3 Minimum H2O Temperature
T2 Change Over
T1 Return Air Temperature
F2-F2 Window free contact
F1-F1 Remote IN free contact
T-MB Remote control interfacing
Power Unit
UP-AU
DIP1=OFF
DIP5=OFF
DIP7=OFF
Power Supply
230Vac 50Hz
PE L N
FCT
E
LED
SAFETY
MICROSWITCH
CLOSE - POWER ON
OPEN - POWER OFF
M2 M1 M3
SPDT
ALARM STATUS
FREE CONTACT
NO NC com
IAQ HVB
High Voltage Board
M4
N PE L
230Vac
50Hz
HIGH
VOLTAGE
OUTPUT
8KV
230V 50Hz
6 speed

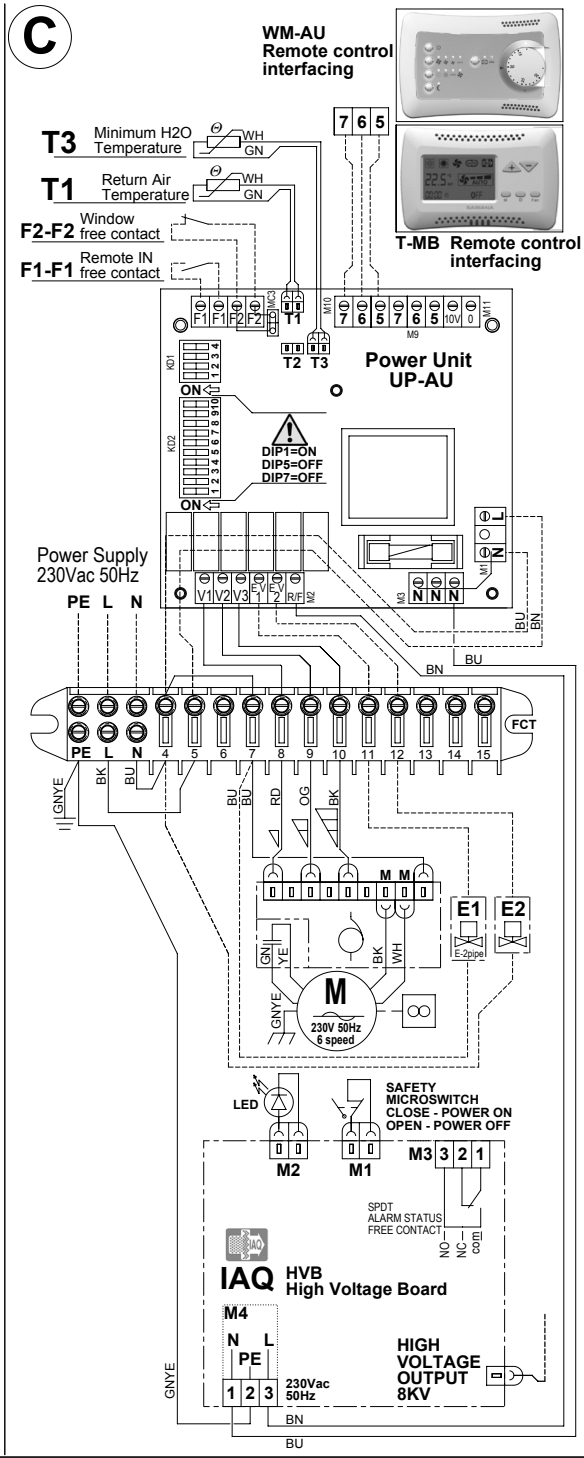
C
WM-AU
Remote control
interfacing
T3 Minimum H2O Temperature
T1 Return Air Temperature
F2-F2 Window free contact
F1-F1 Remote IN free contact
T-MB Remote control interfacing
Power Unit
UP-AU
DIP1=ON
DIP5=OFF
DIP7=OFF
Power Supply
230Vac 50Hz
PE L N
FCT
E1
E2
F-2pipe
LED
SAFETY
MICROSWITCH
CLOSE - POWER ON
OPEN - POWER OFF
M2 M1 M3
SPDT
ALARM STATUS
FREE CONTACT
NO NC com
IAQ HVB
High Voltage Board
M4
N PE L
230Vac
50Hz
HIGH
VOLTAGE
OUTPUT
8KV
230V 50Hz
6 speed

Fläkt-
konvektor

SE-0487

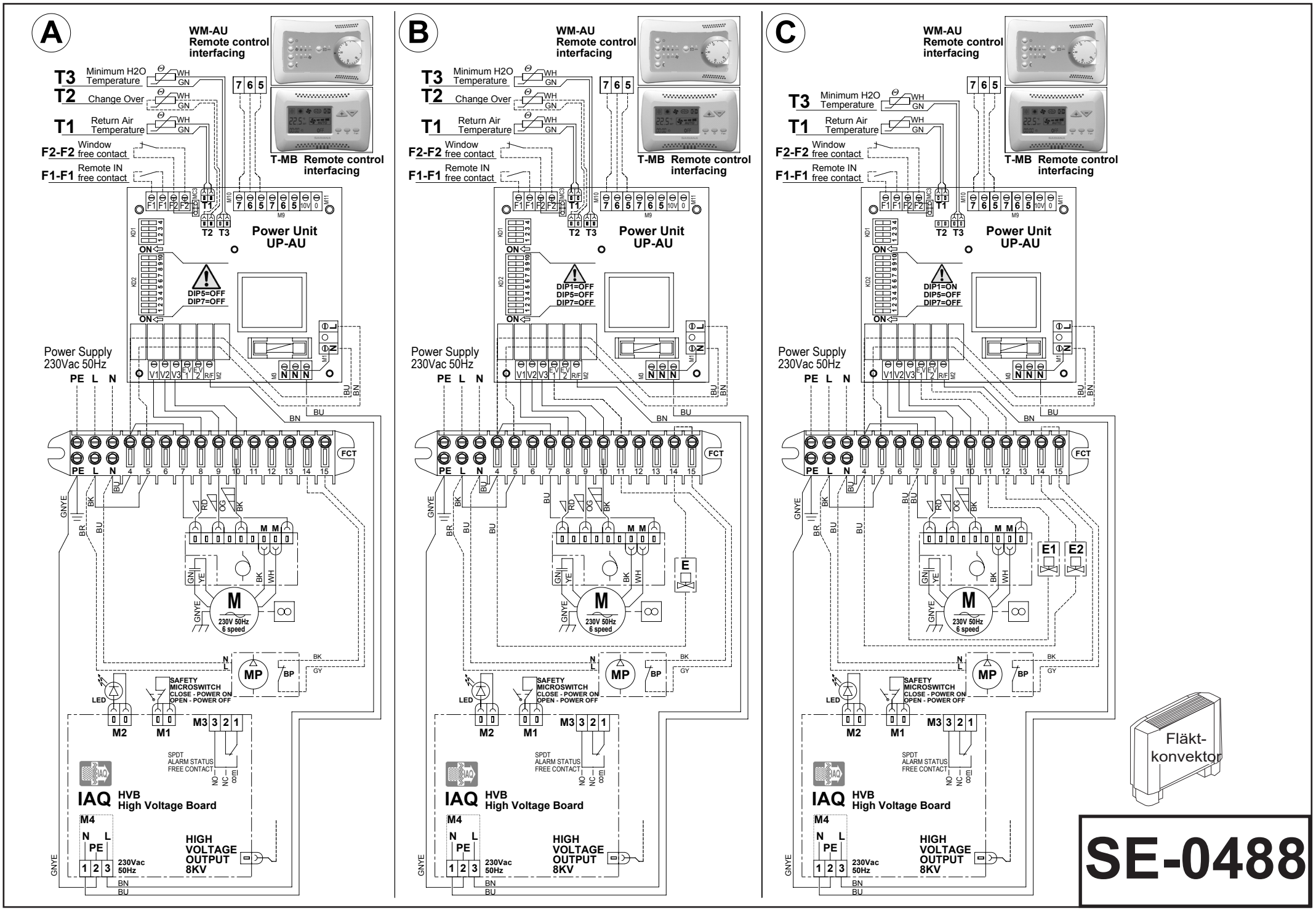
A
B
C
WM-AU
Remote control
interfacing
T-MB Remote control
interfacing
T3 Minimum H2O Temperature
T2 Change Over
T1 Return Air Temperature
F2-F2 Window free contact
F1-F1 Remote IN free contact
Power Unit
UP-AU
DIP5=OFF
DIP7=OFF
DIP1=OFF
DIP5=OFF
DIP7=OFF
DIP1=ON
DIP5=OFF
DIP7=OFF
Power Supply
230Vac 50Hz
PE L N
FCT
M
230V 50Hz
6 speed
MP
BP
LED
SAFETY
MICROSWITCH
CLOSE - POWER ON
OPEN - POWER OFF
M2
M1
M3
SPDT
ALARM STATUS
FREE CONTACT
NO NC com
IAQ HVB
High Voltage Board
M4
N PE L
230Vac
50Hz
HIGH
VOLTAGE
OUTPUT
8KV
E
E1
E2
Fläkt-
konvektor
SE-0488

Fläkt-
konvektor
ECM

SE-0489

A

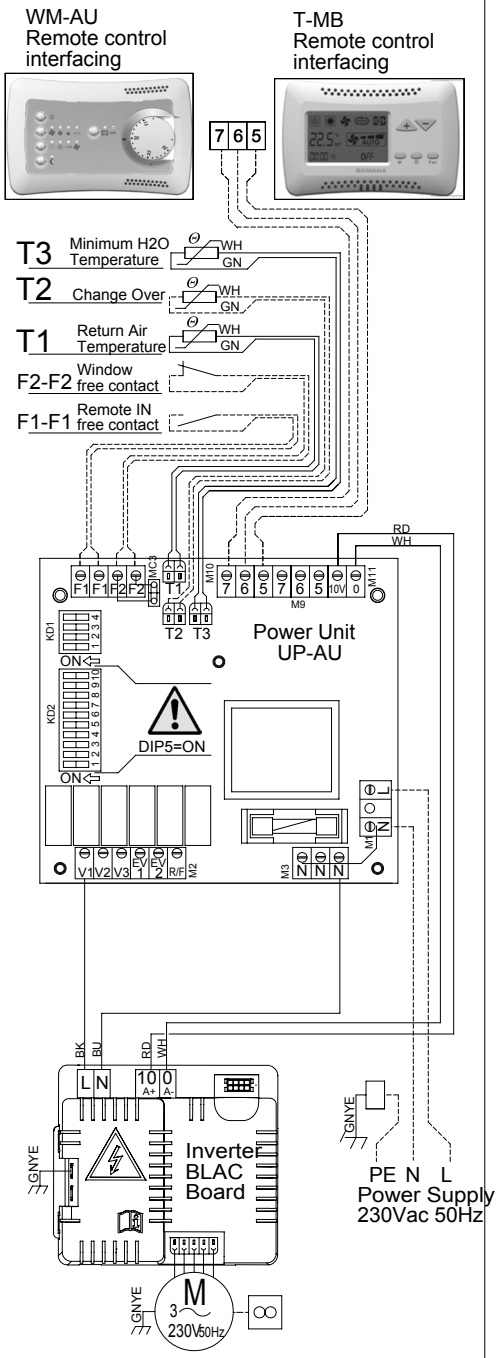
WM-AU
Remote control
interfacing
T-MB
Remote control
interfacing
7 6 5
T3 Minimum H2O Temperature
T2 Change Over
T1 Return Air Temperature
F2-F2 Window free contact
F1-F1 Remote IN free contact
WH
GN
RD
WH
Power Unit
UP-AU
DIP5=ON
Inverter
BLAC
Board
PE N L
Power Supply
230Vac 50Hz
GNYE
M
3~
230V 50Hz

B

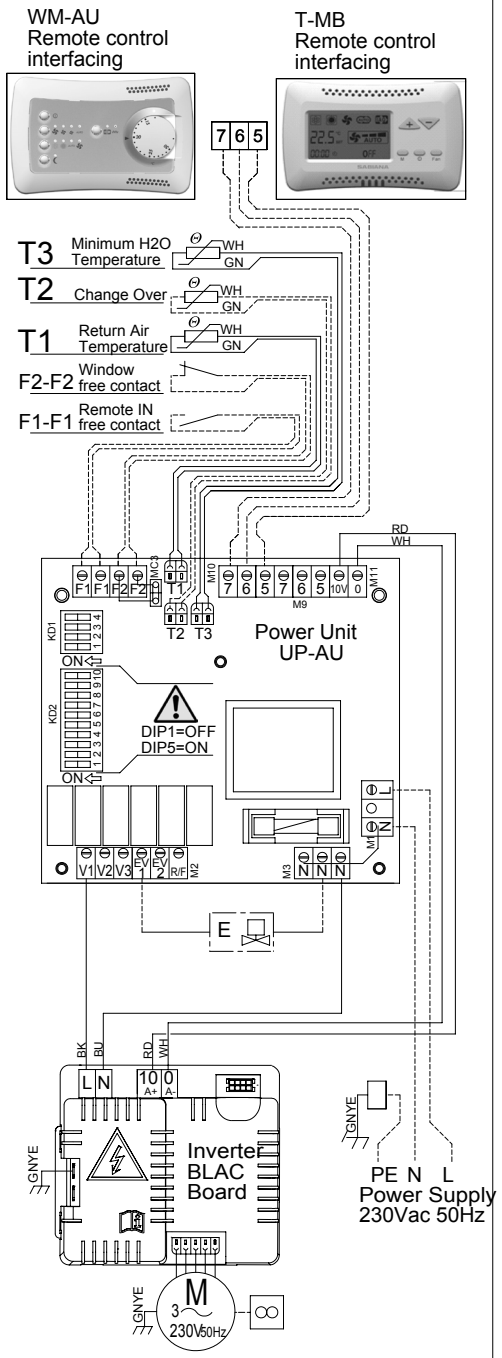
WM-AU
Remote control
interfacing
T-MB
Remote control
interfacing
7 6 5
T3 Minimum H2O Temperature
T2 Change Over
T1 Return Air Temperature
F2-F2 Window free contact
F1-F1 Remote IN free contact
WH
GN
RD
WH
Power Unit
UP-AU
DIP1=OFF
DIP5=ON
E
Inverter
BLAC
Board
PE N L
Power Supply
230Vac 50Hz
GNYE
M
3~
230V 50Hz

C

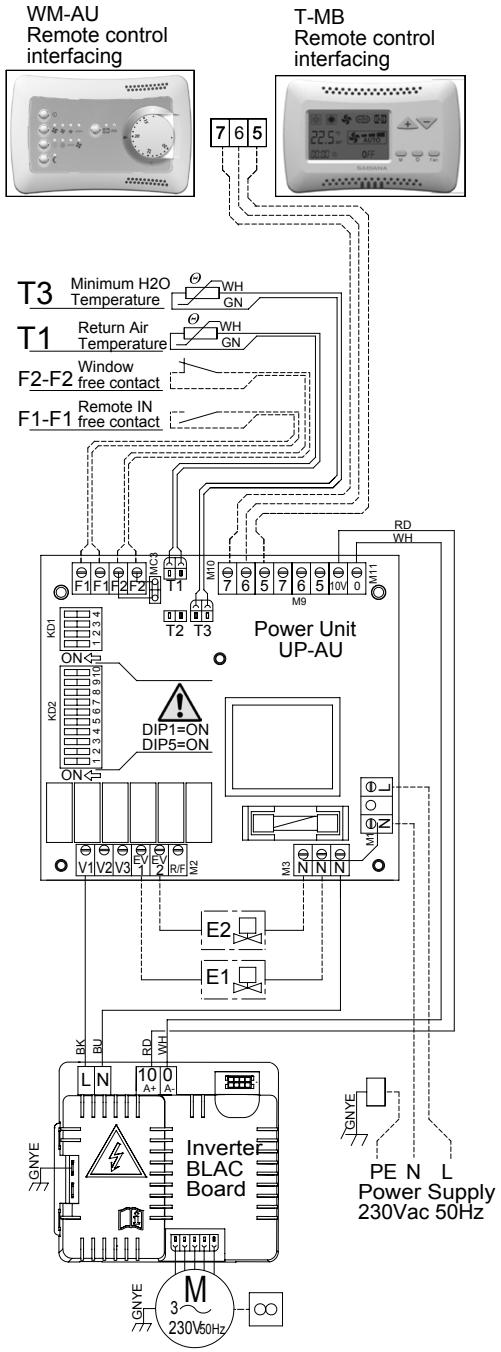
WM-AU
Remote control
interfacing
T-MB
Remote control
interfacing
7 6 5
T3 Minimum H2O Temperature
T1 Return Air Temperature
F2-F2 Window free contact
F1-F1 Remote IN free contact
WH
GN
RD
WH
Power Unit
UP-AU
DIP1=ON
DIP5=ON
E2
E1
Inverter
BLAC
Board
PE N L
Power Supply
230Vac 50Hz
GNYE
M
3~
230V 50Hz

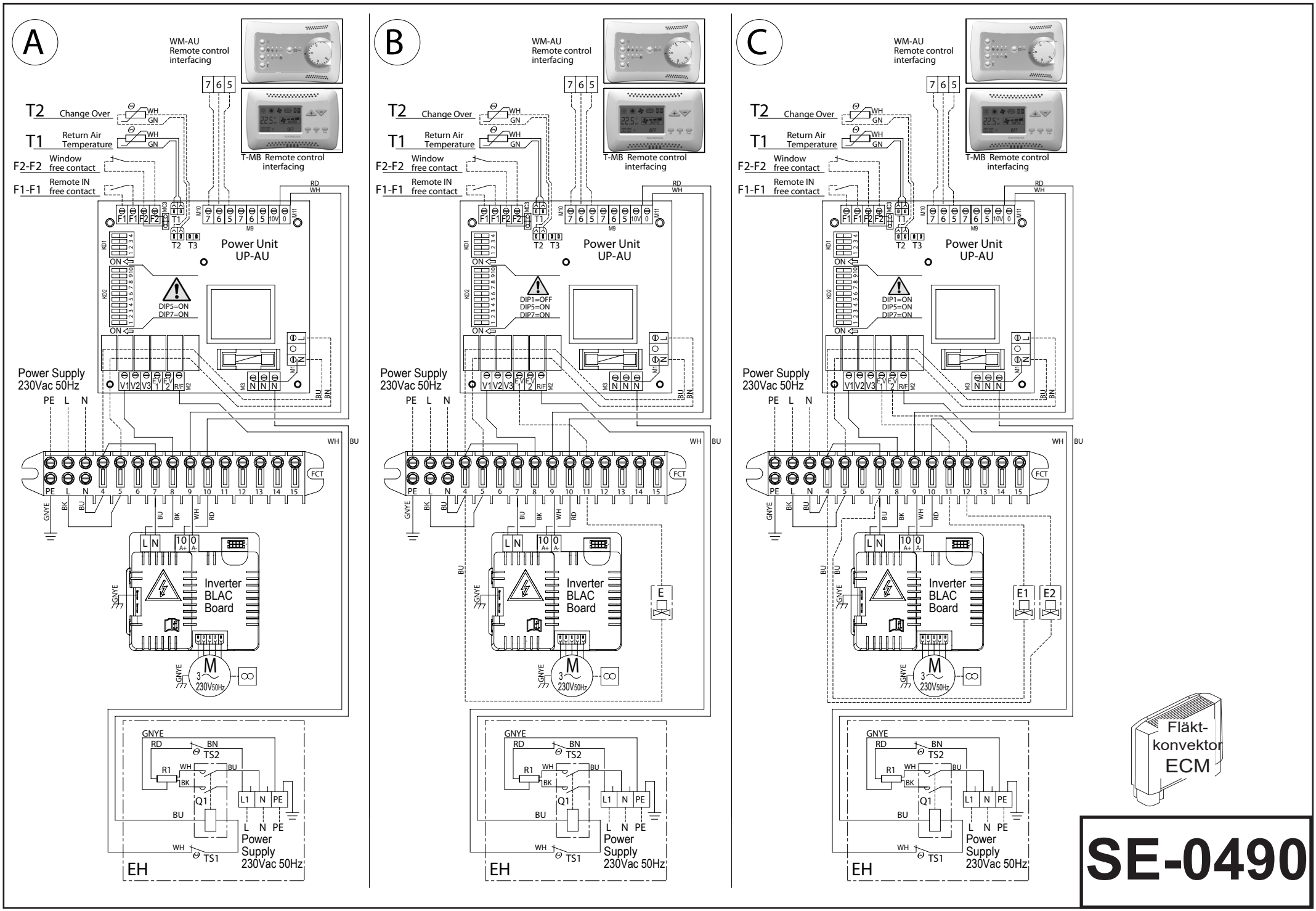
A
B
C
WM-AU
Remote control
interfacing
T-MB Remote control
interfacing
T2 Change Over
T1 Return Air Temperature
F2-F2 Window free contact
F1-F1 Remote IN free contact
Power Unit
UP-AU
DIP5=ON
DIP7=ON
DIP1=OFF
DIP1=ON
Power Supply
230Vac 50Hz
PE L N
Inverter
BLAC
Board
E
E1
E2
Fläkt-
konvektor
ECM
TS2
TS1
Q1
R1
EH
Power
Supply
230Vac 50Hz
SE-0490

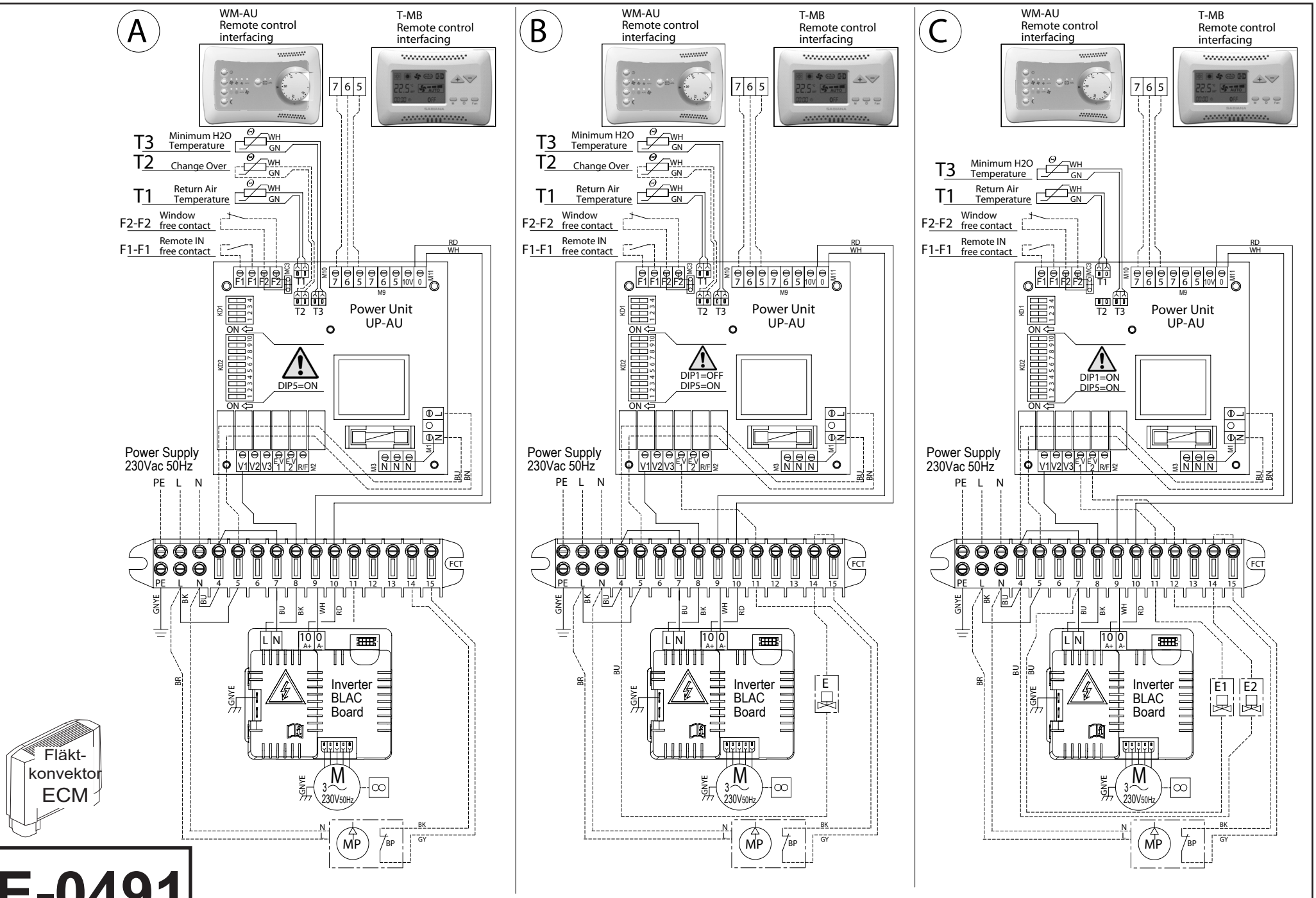
A
B
C
WM-AU
Remote control
interfacing
T-MB
Remote control
interfacing
T3 Minimum H2O Temperature
T2 Change Over
T1 Return Air Temperature
F2-F2 Window free contact
F1-F1 Remote IN free contact
Power Unit
UP-AU
DIP5=ON
DIP1=OFF
DIP5=ON
DIP1=ON
DIP5=ON
Power Supply
230Vac 50Hz
PE L N
Inverter
BLAC
Board
Fläkt-
konvektor
ECM
SE-0491

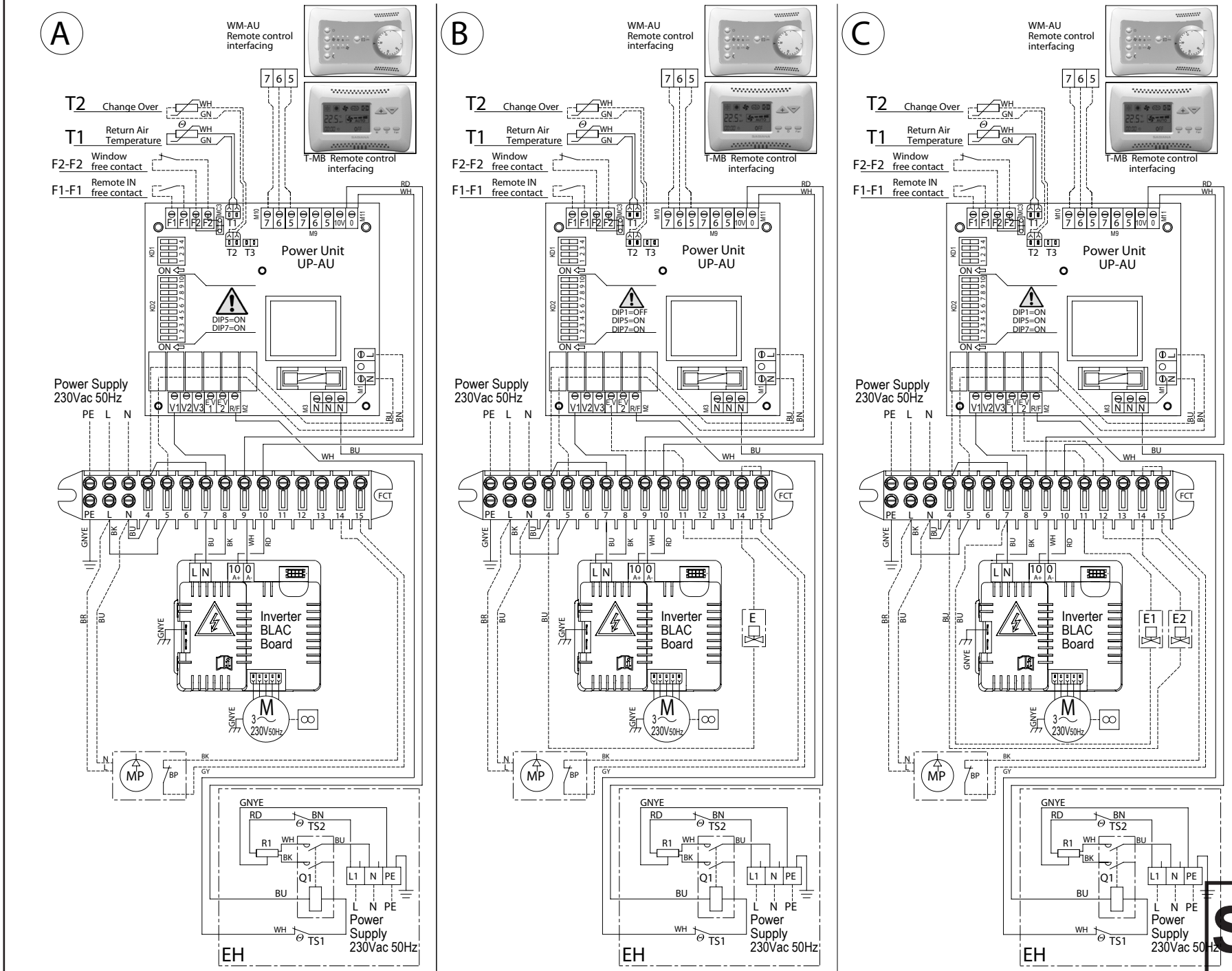
A
B
C
WM-AU
Remote control
interfacing
T-MB Remote control
interfacing
T2 Change Over
T1 Return Air Temperature
F2-F2 Window free contact
F1-F1 Remote IN free contact
Power Unit
UP-AU
DIP5=ON
DIP7=ON
DIP1=OFF
DIP5=ON
DIP7=ON
DIP1=ON
DIP5=ON
DIP7=ON
Power Supply
230Vac 50Hz
Inverter
BLAC
Board
230V50Hz
MP
BP
TS2
TS1
Q1
R1
Power
Supply
230Vac 50Hz
EH
E
E1
E2

Fläkt-
konvektor
ECM

SE-0492

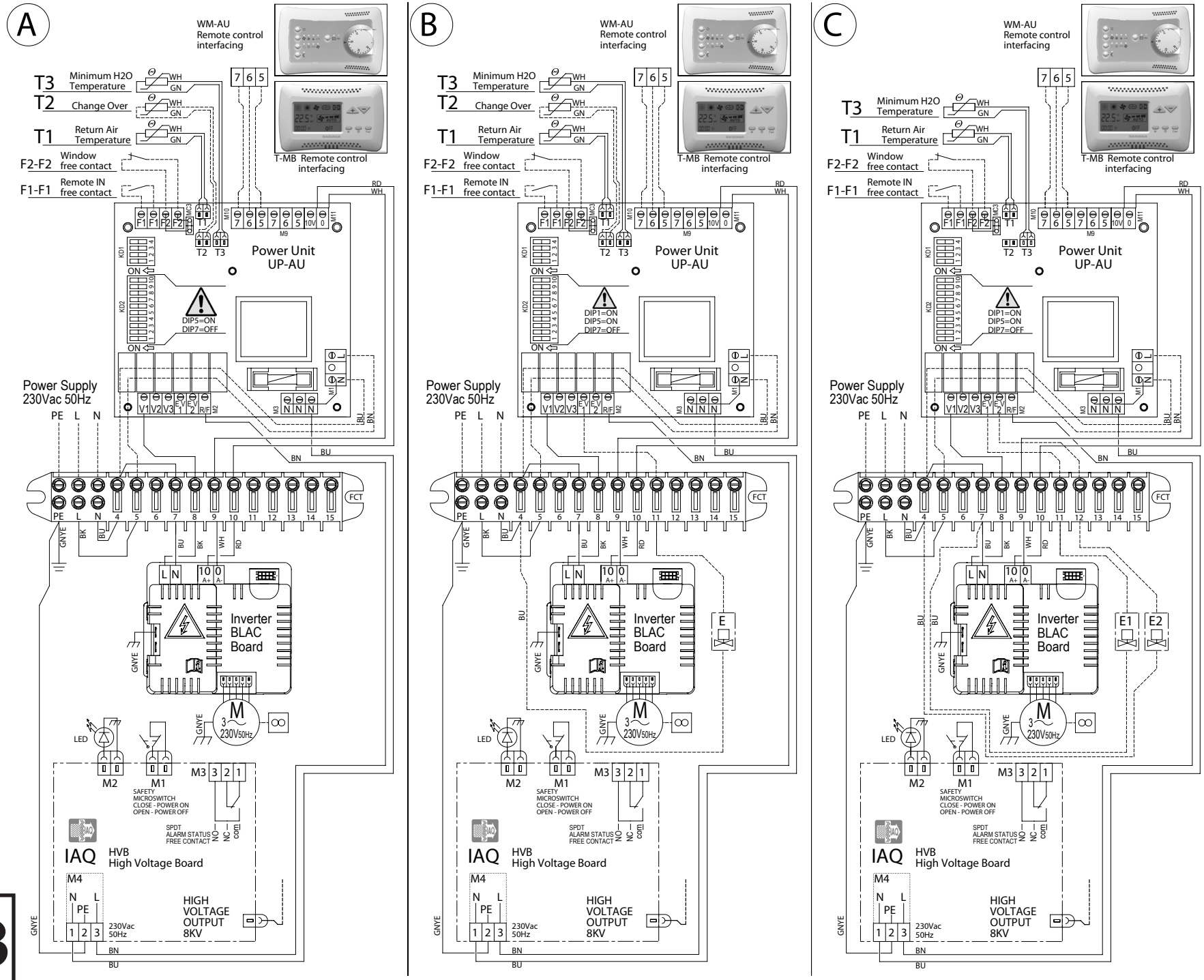
A
B
C
WM-AU
Remote control
interfacing
T-MB Remote control
interfacing
T3 Minimum H2O Temperature
T2 Change Over
T1 Return Air Temperature
F2-F2 Window free contact
F1-F1 Remote IN free contact
Power Unit
UP-AU
DIP5=ON
DIP7=OFF
DIP1=ON
DIP5=ON
DIP7=OFF
Power Supply
230Vac 50Hz
PE L N
Inverter
BLAC
Board
E
E1
E2
LED
M2
M1
M3
SAFETY
MICROSWITCH
CLOSE - POWER ON
OPEN - POWER OFF
SPDT
ALARM STATUS
FREE CONTACT
NO
NC
com
IAQ
HVB
High Voltage Board
M4
N L
PE
230Vac
50Hz
HIGH
VOLTAGE
OUTPUT
8KV
Fläkt-
konvektor
ECM

SE-0493

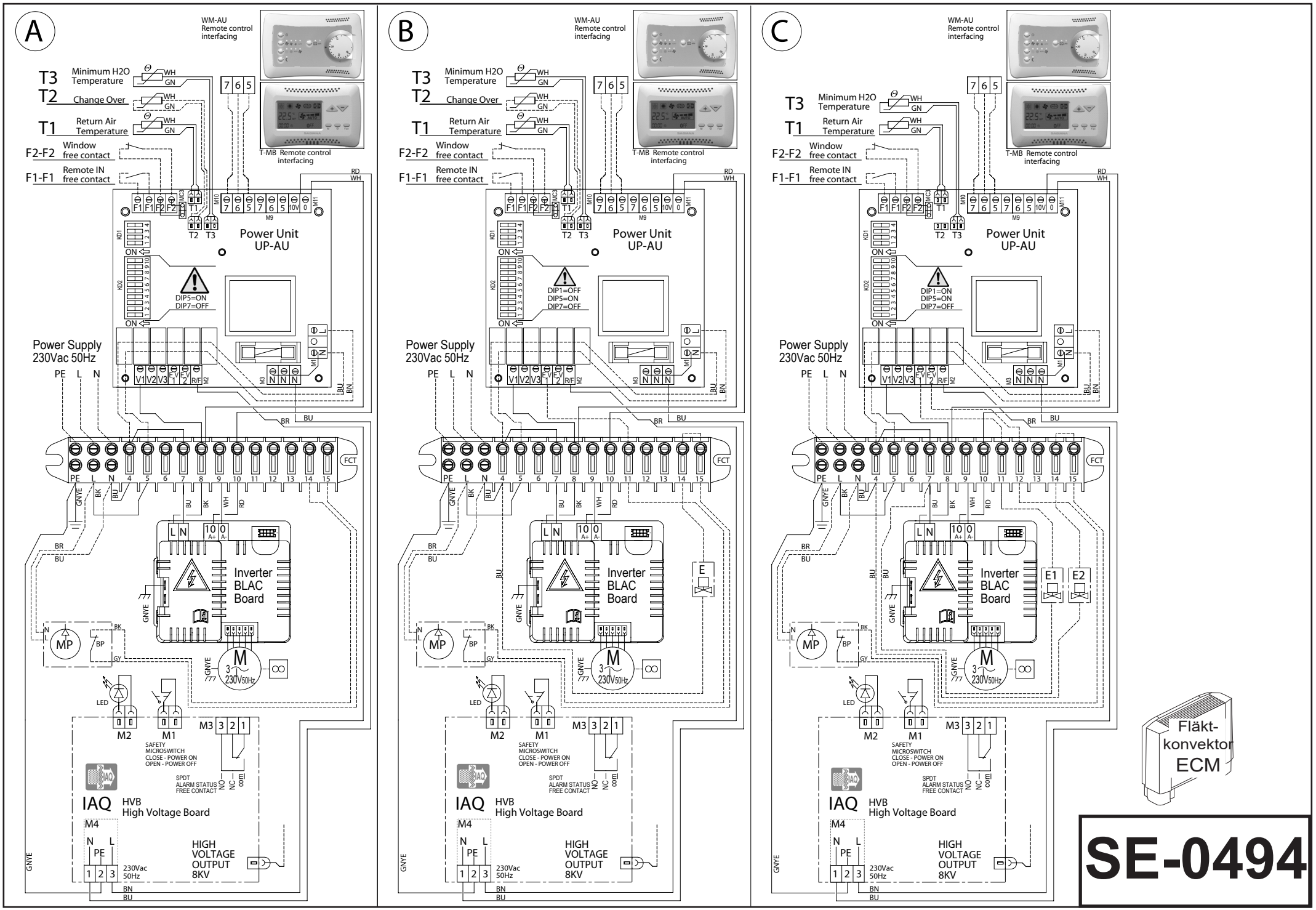
A
B
C
WM-AU
Remote control
interfacing
T-MB Remote control
interfacing
T3 Minimum H2O Temperature
T2 Change Over
T1 Return Air Temperature
F2-F2 Window free contact
F1-F1 Remote IN free contact
Power Unit
UP-AU
DIP5=ON
DIP7=OFF
DIP1=OFF
DIP5=ON
DIP7=OFF
DIP1=ON
DIP5=ON
DIP7=OFF
Power Supply
230Vac 50Hz
Inverter
BLAC
Board
MP
M
230V50Hz
LED
M2
M1
M3
SAFETY
MICROSWITCH
CLOSE - POWER ON
OPEN - POWER OFF
SPDT
ALARM STATUS
FREE CONTACT
IAQ
HVB
High Voltage Board
M4
230Vac
50Hz
HIGH
VOLTAGE
OUTPUT
8KV
E
E1
E2
Fläkt-
konvektor
ECM

SE-0494